MIKALOR
Fasteners

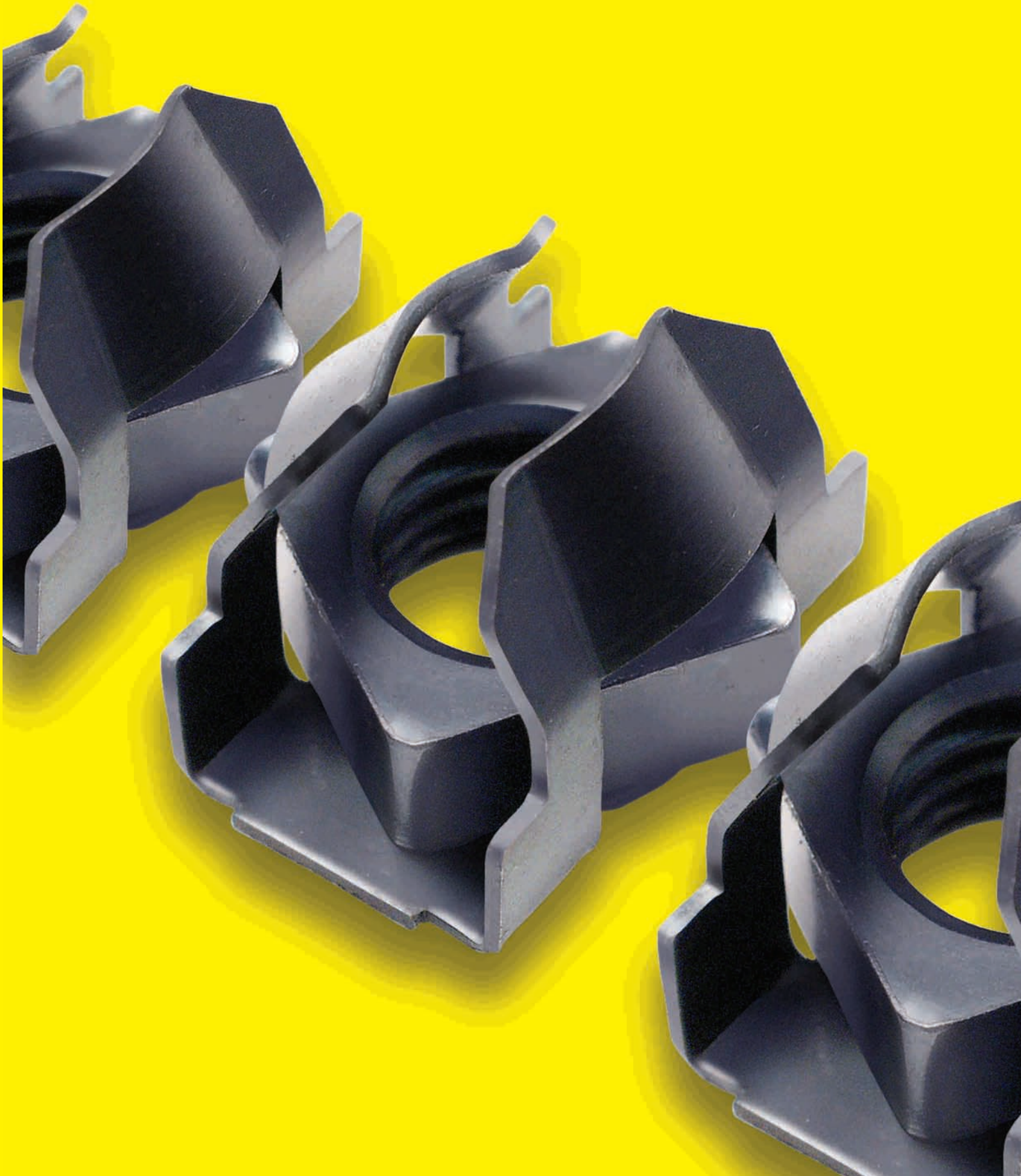

MIKALOR Fasteners

GRUPO **MIKALOR**

The Mikalor Group was founded with the aim of ensuring the specialization of each of the member companies and creating synergies in order to maximize our competitive advantage with respect to the competition.

One examples of this specialization is that each of the companies in the Group is located in a different town within the province of Barcelona. Each company also has its own range and catalogue of products in order to guarantee a focus on productivity.

The areas of finance and human resources are handled centrally by the Mikalor Group.

The principal member companies of the Mikalor Group are: Mikalor Tools and Engineering, Mikalor Hose Clamps, Mikalor Fastening Solutions and Damesa.

- This catalogue is the property of the Mikalor Group. Any partial or total reproduction of any or all of its contents is strictly forbidden, unless written authorization is given by the Mikalor Group or any of the companies which form part of it. Failure to comply with this will lead to prosecution.
- Due to continuing technical advances and the evolution of materials used in the manufacture of the products in this catalogue, Mikalor reserves the right to carry out dimensional, structural or other modifications without giving prior notice, with the aim of supplying a better and more efficient product.
- This catalogue is for commercial use. The details contained herein do not constitute a contract in any way.

MIKALOR

MIKALOR

TOOLS & ENGINEERING

Situated in Sant Quirze del Vallès (Barcelona), Mikalor Tools and Engineering carries out two different but complementary activities. The first of these is their specialization in the development of technical projects, managed by the engineering department. The second activity is the manufacture of dies and machine tools for the manufacture of all Mikalor products and tooling for the manufacture of special parts according to the specifications of our customers. These machine tools are then sent to the Mikalor factory which specializes in the manufacture of the parts in question.

GRUPO G

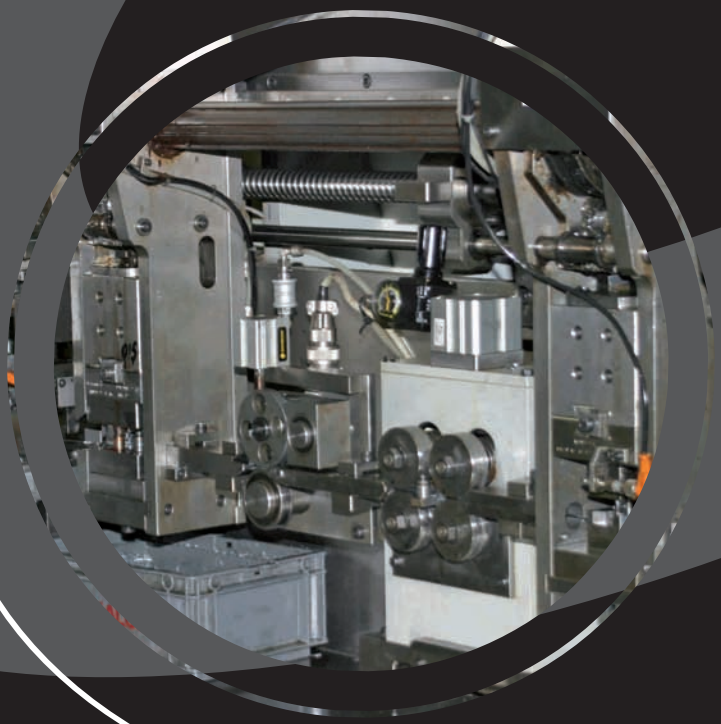

MIKALOR

FASTENING SOLUTIONS

Situated in Manresa (Barcelona), Mikalor Fastening Solutions is where our range of standard metal fasteners is manufactured. This range can be found in our fasteners catalogue. The parts manufactured here include DIN 1481 heavy-duty spring pins, cage nuts, U-nuts and chimney nuts. Special fasteners according to our customers' specifications are also manufactured here.

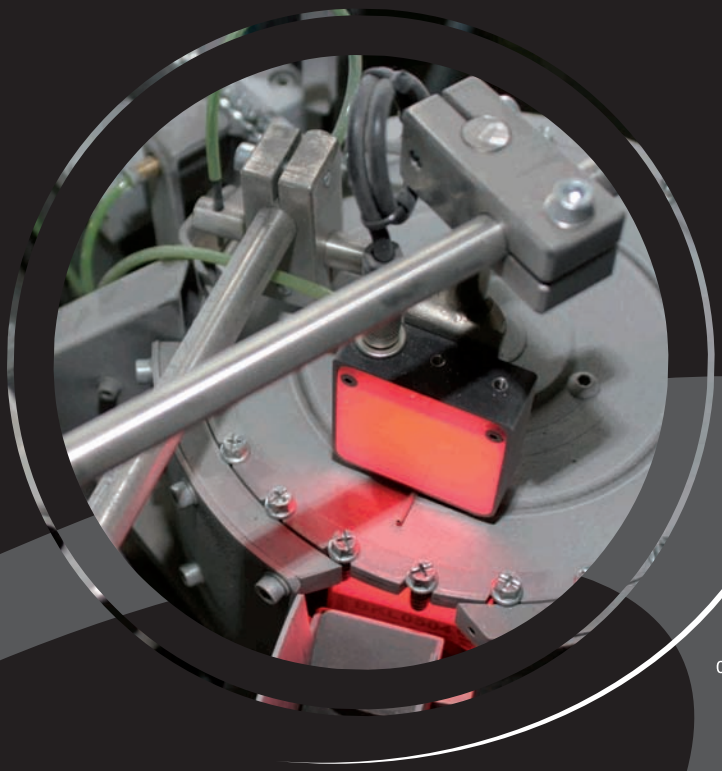

MIKALOR

HOSE CLAMPS

Situated in Sabadell (Barcelona), Mikalor Hose Clamps is responsible for the manufacture of the complete range of hose clamps, including special clamps manufactured according to customers' specifications. In order to ensure top quality in the design and manufacture of our standard and special hose clips and clamps, our engineering department has the most advanced machinery available on the market. We carry out trialing and testing of the performance of our clamps, thereby ensuring that our customers' clamps will give optimum performance is their future application.

MIKALOR

damesa

Situated in Castellar del Vallès (Barcelona), Damesa is the branch of the Group specialized in sales, distribution and worldwide after-sales service of all the products manufactured by the member companies of the Mikalor Group.

Our sales department has an in-depth knowledge of the products manufactured by the Mikalor Group and also of the needs of our customer base. This is the key to the success of the Mikalor Group. The sales department is the ideal conduit for new and innovative solutions to existing problems, either by adapting a standard product or by developing a completely new one, thereby making sure that the customer receives the best solution at the lowest possible cost.

MIKALOR

WASHERS

DIN 6797 External tooth lock washer Form A	10
DIN 6797 Internal tooth lock washer Form J	11
DIN 6798 Serrated lock washer with external teeth Form A	12
DIN 6798 Serrated lock washer with internal teeth Form J	13
DIN 6798 Serrated lock washer with external teeth Form V	14
ADD Double-toothed lock washer	15
AET serrated disc washer for DIN 912 bolts	16
AET serrated disc washer for DIN 912 bolts white zinc-plated	17
DIN 137 curved spring washer (Form A)	18
DIN 137 wave spring washer (Form B)	19
ANR internal ribbed automotive washer	20
DIN 6799 E-type circlip	21

CIRCLIPS

DIN 471 External circlip	22 - 25
DIN 472 Internal circlip	26 - 27

SPRING PINS

DIN 1481 heavy-duty spring pin	28 - 33

NUTS

Standard cage nut (with Stainless Steel cage)	34 - 36
Front-mounting cage nut	37
Cylindrical cage nut	38
Clip-mounting cage nut	39
TNI Cage nut for leveling	40
TRS Spring nut	41
TR U-nut for DIN 7970 threaded bolts	42 - 43
TR U-nut for metric threaded bolts	44 - 45
TRU Universal speed nut	46
TRE Special speed nut	47
TRT-T Chimney (Lug) nut	48
TRT Chimney (Lug) nut	49
TCL Special cage nut	50
TRO Expansion speed nut	51

SPECIAL FASTENERS

SRM Circular uncapped push-on fastener for shafts	52 - 54
SRC circular push-on fastener	55
SRR Flat nut for shafts	56
CL Shaft clip	57
SCB Compression ring	58
SCO Cable Clip	59
CLS Safety Clip	60
SRV Spring steel panel latch	61
SCL Tubular Clip	62
CLG Cable Clip	63
GRU Edge Clip	64
Special fastening washer	65
Button Clip	66

ASSORTMENT BOXES

DIN 471 Assortment Box	70
Din 472 Assortment Box	71
DIN 1481 Assortment Box	72
DIN 6799 Assembly Tools	73

MIKALOR

WASHERS

WASHERS

DIN 6797 External tooth lock washer Form A

Information

External tooth lock washers manufactured according to DIN 6797 allow the immobilization of fasteners such as bolts and screws which are subject to vibrations while maintaining uniform tightening torque, in any mechanical electrical or electronic application.

In addition to these anti-vibration properties, this washer also improves the quality of electrical circuits as each of the outer teeth forms an excellent point of contact.

The fact that Form A has teeth on the outer circumference of the washer means that there is uniform contact on the biggest possible surface area, thereby reducing the danger of loosening.

The surface of the bolt or screw should be flat and perpendicular to its vertical axis.

DIN 6797 External tooth lock washer Form A

Diameter d_1		Part nº Form "A"	d_2		s ±		For metric bolt M.	Whitworth equivalent W.	Box quantity	Outer box quantity
3,2	+0,16	01040058	6	-0,3	0,4	0,020	3	1/8"	7000	112000
(*) 3,7	+0,16	01040066	7	-0,36	0,5	0,1	3,5		1000	64000
4,3	+0,16	01040074	8	-0,36	0,5	0,025	4	5/32"	2500	40000
(*) 4,6	+0,16	01041069	9	-0,36	0,5	0,1	4,5		1000	64000
5,3	+0,16	01040082	10	-0,36	0,6	0,025	5	3/16"	1500	24000
6,4	+0,22	01040090	11	-0,43	0,7	0,030	6		2500	20000
(*) 6,5	+0,22	01041106	12,5	-0,43	0,7	0,1		1/4"	1000	16000
(*) 7,4	+0,22	01040103	12,5	-0,43	0,8	0,030	7	9/32"	1000	16000
8,4	+0,22	01040111	15	-0,43	0,8	0,030	8	5/16"	1000	16000
10,5	+0,27	01040120	18	-0,43	0,9	0,030	10	3/8"	1000	8000
13	+0,27	01040138	20,5	-0,52	1	0,030	12		900	3600
15	+0,40	01040154	24	-0,52	1	0,030	14		650	2600
17	+0,40	01040162	26	-0,52	1,2	0,035	16		600	2400
19		01040170	30	-0,52	1,4	0,035	18		450	4000
21		01040197	33	-0,62	1,4	0,035	20		350	2000

Material specifications:
SPRING STEEL
HrC 36÷43 (HV 350-425)

Surface treatment:
Anti-rust oil-dipped

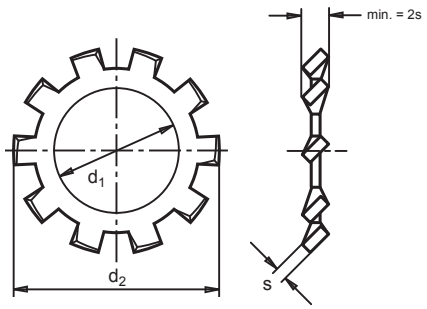

DIN 6797 External tooth lock washer Form J

Information

External tooth lock washers manufactured according to DIN 6797 allow the immobilization of fasteners such as bolts and screws which are subject to vibrations while maintaining uniform tightening torque in any mechanical electrical or electronic application.
Form J is particularly recommended when the angle of the internal chamfer of the head of the bolt or screw is pronounced and in all cases where the head of the screw or bolt is smaller than the diameter of the washer.
This washer should also be used when the surface of the fastener is irregular or convex.

DIN 6797 External tooth lock washer Form J

Diameter d_1		Part nº Form "J"	d_2		s ±		For metric bolt M.	Whitworth equivalent W.	Box quantity	Outer box quantity
(*) 2,2	+0,14	01030020	4,5	-0,3	0,3	0,1	2		1000	64000
(*) 2,7	+0,14	01030046	5,5	-0,3	0,4	0,1	2,5		1000	64000
3,2	+0,16	01030054	6	-0,3	0,4	0,020	3	1/8"	6000	96000
(*) 3,7	+0,16	01030062	7	-0,36	0,5	0,1	3,5		1000	64000
4,3	+0,16	01030070	8	-0,36	0,5	0,025	4	5/32"	2500	40000
5,3	+0,16	01030089	10	-0,36	0,5	0,025	5	3/16"	1500	48000
6,4	+0,22	01030097	11	-0,43	0,7	0,030	6		2500	40000
8,4	+0,22	01030118	15	-0,43	0,8	0,030	8	5/16"	1000	16000
10,5	+0,27	01030126	18	-0,43	0,9	0,030	10	3/8"	1250	10000
13	+0,27	01030134	20,5	-0,52	1	0,030	12		750	6000
15	+0,40	01030150	24	-0,52	1	0,030	14		500	4000
17	+0,40	01030169	26	-0,52	1,2	0,035	16	3/4"	600	4800
19	+0,33	01030177	30	-0,52	1,4	0,035	18		450	3600
21	+0,33	01030185	32	-0,62	1,4	0,035	20		350	2800
23		01030193	36	-0,62	1,5	0,035	22		250	2000
25		01030206	38	-0,62	1,5	0,035	24		200	3200

Material specifications:
SPRING STEEL
HrC 36÷43 (HV 350-425)

Surface treatment:
Anti-rust oil-dipped

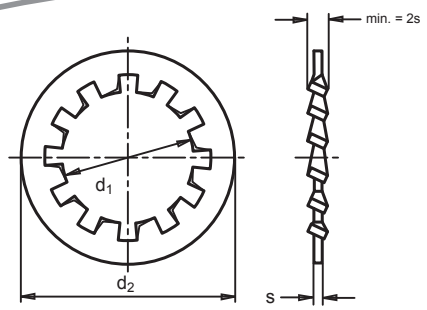

DIN 6798 Serrated lock washer with external teeth Form A

Information

External tooth lock washers manufactured according to DIN 6798 allow the immobilization of fasteners such as bolts and screws which are subject to vibrations while maintaining uniform tightening torque in any mechanical electrical or electronic application. In addition to these anti-vibration properties, this washer also improves the quality of electrical circuits as each of the outer teeth forms an excellent point of contact. This washer is recommended for use in inaccessible application zones where it may be difficult to tighten the bolt or screw once fitted.

The fact that Form A has teeth on the outer circumference of the washer means that there is uniform contact on the biggest possible surface area, thereby reducing the danger of loosening.

The surface of the bolt or screw should be flat and perpendicular to its vertical axis.

The permanent inclination of the teeth, which are superimposed one upon the other around the circumference of the washer, gives a very high friction factor allowing for progressive and evenly distributed tightening torque around the head of the bolt or screw.

The tightening torque applied on the teeth of this washer should in no case exceed the recommended tightening torque for 8.8 class bolts.

When tightening torque is applied, the edges of the teeth of this washer are incrusted in the head of the bolt or screw, forming an immobile unit resistant to loosening.

DIN 6798 Serrated lock washer with external teeth Form A

Diameter d_1	Part nº Form "A"	d_2		s ±		For metric bolt M.	Whitworth equivalent W.	Box quantity	Outer box quantity
3,2	01170054	6	-0,3	0,4	0,020	3	1/8"	8000	64000
4,3	01170070	8	-0,36	0,5	0,020	4	5/35"	2000	32000
5,1	01170089	9	-0,36	0,5	0,025	5	3/16"	1500	24000
6,4	01170097	11	-0,43	0,7	0,025	6	1/4"	1750	14000
7,4	01170100	12,5	-0,43	0,8	0,030	7		1000	16000
8,2	01170118	14	-0,43	0,8	0,030	8	5/16"	1000	16000
10,5	01170126	18	-0,43	0,9	0,030	10	3/8"	1000	8000
13	01170134	20,5	-0,52	1	0,030	12		500	4000
15	01170150	24	-0,52	1	0,030	14	9/16"	400	3200
17	01170169	26	-0,52	1,2	0,035	16	5/8"	500	4000
19	01170177	30	-0,52	1,4	0,035	18		300	2400
21	01170193	33	-0,62	1,4	0,035	20	3/4"	250	2000

Material specifications:
SPRING STEEL
HrC 36÷43 (HV 350-425)

Surface treatment:
Anti-rust oil-dipped

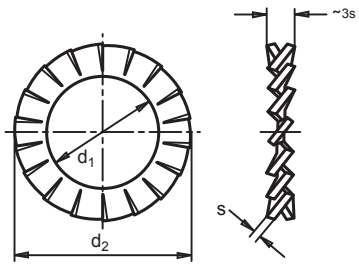

DIN 6798 Serrated lock washer with internal teeth Form J

Information

External tooth lock washers manufactured according to DIN 6798 allow the immobilization of fasteners such as bolts and screws which are subject to vibrations while maintaining uniform tightening torque in any mechanical electrical or electronic application. In addition to the anti-vibration characteristic, this washer also improves the quality of electrical circuits as each of the inner teeth forms an excellent point of contact. This washer is recommended for use in inaccessible application zones where it may be difficult to tighten the bolt or screw once fitted.

Form J is particularly recommended when the angle of the internal chamfer of the head of the bolt or screw is pronounced and in all cases where head is smaller than the diameter of the washer.

This washer should also be used when the surface of the fastener is irregular or convex.

The permanent inclination of the teeth, which are superimposed one upon the other around the circumference of the washer, gives a very high friction factor allowing for progressive and evenly distributed tightening torque around the head of the bolt or screw.

The tightening torque applied on the teeth of this washer should in no case exceed the recommended tightening torque for 8.8 class bolts.

When tightening torque is applied the edges of the teeth of this washer are incrusted in the head of the bolt or screw, forming an immobile unit resistant to loosening.

DIN 6798 Serrated lock washer with external teeth Form J

Diameter d_1	Part nº Form "J"	d_2		s ±		For metric bolt M.	Whitworth equivalent W.	Box quantity	Outer box quantity
3,2	01180058	6	-0,3	0,4	0,020	3	1/8"	5000	64000
4,3	01180074	8	-0,36	0,5	0,025	4	5/35"	2500	40000
5,1	01180082	9	-0,36	0,5	0,025	5	3/16"	1750	28000
6,4	01180090	11	-0,43	0,7	0,030	6		2000	16000
7,4	01180103	12,5	-0,43	0,8	0,030	7	5/32"	1250	20000
8,2	01180111	14	-0,43	0,8	0,030	8	5/16"	1000	16000
10,5	01180120	18	-0,43	0,9	0,030	10	3/8"	1000	8000
13	01180138	20,5	-0,52	1	0,030	12		750	6000
13,2	01180146	22	-0,52	1	0,030		1/2"	600	4800
14	01180154	24	-0,52	1	0,030	14		500	4000
17	01180162	26	-0,52	1,2	0,030	16	5/8"	500	4000
19	01180170	30	-0,52	1,4	0,035	18		350	2800
21	01180189	33	-0,62	1,4	0,035	20		250	2000
23	01180197	36	-0,62	1,5	0,035	22		200	4000

Material specifications:

SPRING STEEL
HrC 36÷43 (HV 350-425)

Surface treatment:

Anti-rust oil-dipped

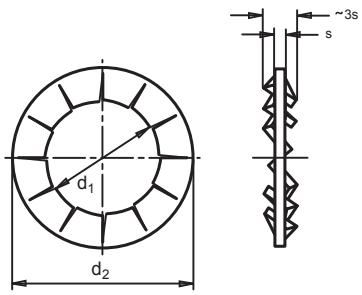

DIN 6798 Serrated lock washer with external teeth Form V

Information

External tooth lock washers manufactured according to DIN 6798 allow the immobilization of fasteners such as bolts and screws which are subject to vibrations while maintaining uniform tightening torque in any mechanical, electrical or electronic application. In addition to the anti-vibration characteristic, this washer also improves the quality of electrical circuits as each of the outer teeth forms an excellent point of contact. This washer is recommended for use in inaccessible application zones where it may be difficult to tighten the bolt or screw once fitted.

Form V is recommended for use when the head of the bolt is at 90º to the vertical axis.

The permanent inclination of the teeth, which are superimposed one upon the other around the circumference of the washer, gives a very high friction factor allowing for progressive and evenly distributed tightening torque around the head of the bolt or screw.

The tightening torque applied on the teeth of this washer should in no case exceed the recommended tightening torque for 8.8 class bolts.

When tightening torque is applied the edges of the teeth of this washer are incrusted in the head of the bolt or screw, forming an immobile unit resistant to loosening.

DIN 6798 Serrated lock washer with external teeth Form V

Diameter d_1	Part nº Form "V"	d_2		s ±		For metric bolt M.	Whitworth equivalent W.	Box quantity	Outer box quantity
3,2	01190043	6	-0,3	0,2	± 0,015	3	1/8"	4000	64000
4,3	01190060	8	-0,36	0,25	± 0,015	4	5/32"	4000	64000
5,3	01190078	9,8	-0,36	0,3	± 0,020	5	3/16"	2500	40000
6,4	01190086	11,8	-0,43	0,4	± 0,020	6	1/4"	1250	20000
8,4	01190094	15,3	-0,43	0,4	± 0,020	8	5/16"	1250	20000
10,5	01190107	19	-0,43	0,5	± 0,025	10	3/8"	1000	8000
13	01190115	23	-0,52	0,5	± 0,025	12	1/2"	500	4000
15	01190123	26,2	-0,52	0,6	± 0,025	14	9/16"	400	3200
17	01190131	30,2	-0,52	0,6	± 0,025	16	5/8"	250	2000

Material specifications:
SPRING STEEL
HrC 36÷43 (HV 350-425)

Surface treatment:
Anti-rust oil-dipped

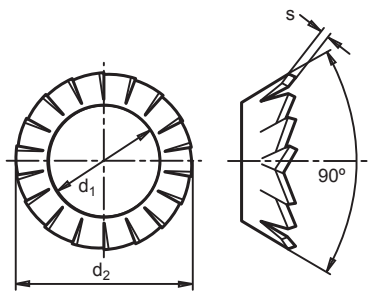

ADD Double-toothed lock washer

Information

This washer is used in panel assembly using holes and groves which are much bigger than the diameter of the screw or bolt, in order to achieve evenly distributed pressure over the entire area of contact. The ADD washer is also very useful when fastening two panels together. Lateral movement can be avoided as the panels remain fixed in a static position.

The diameter of the washer chosen should be far greater than the diameter of the hole or groove in order to ensure sufficient contact area. The advantage of the use of the ADD washer is that the specific pressure is spread over a greater surface area in materials which are softer than steel.

ADD Double-toothed lock washer

Diameter d_1	Part nº ADD	s	d_2 ±0,3	Box quantity	Outer box quantity
4,5 ±0,3	01060012	0,5	14,0	1000	16000
5,5 ±0,3	01060020	0,5	17,0	1000	16000
6,5 ±0,3	01060039	0,6	20,5	1000	8000
8,5 ±0,3	01060055	0,8	23,0	1000	8000
10,5 ±0,3	01060063	1	26,0	1000	8000
13 ±0,3	01060071	1,1	31,0	500	4000

Material specifications:
SPRING STEEL
HrC 43÷49 (HV 425-495)

Surface treatment:
Anti-rust oil-dipped

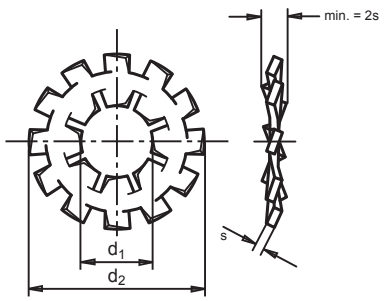

AET
Serrated disc washer for DIN 912 bolts

Information

The AET washer was designed specifically for applications where the outer diameter of the washer cannot exceed that of the bolt head.
Thanks to the conical form of this washer, the tightening torque is spread evenly in all applications. The serrated surfaces are incrusted into the head of the bolt or screw and also into the surface of the part which is being fastened, forming an immobile unit resistant to loosening if subjected to vibration.
This washer is suitable for use with a wide range of screws and bolts. It is very useful for use in mechanical assemblies where a locking function is essential. The elasticity of this washer compensates for axial forces avoiding lateral movement and unwanted grating noises.
The AET washer is particularly recommended for use for bolts manufactured according to DIN 74 and DIN 912 due to the perfect fit.

AET Serrated disc washer for DIN 912 bolts

Diameter d_1		Part n° AET	d_2		h Maximum	s	For Metric bolt M	Box quantity	Outer box quantity
3,2	+0,18	02320016	5,5	-0,2	0,85	0,45	3	1000	64000
4,3	+0,18	02320024	7	-0,25	0,95	0,50	4	1000	64000
5,3	+0,18	02320032	9	-0,25	1,05	0,60	5	1000	64000
6,4	+0,22	02320040	10	-0,25	1,2	0,70	6	1000	16000
8,4	+0,22	02320059	13	-0,3	1,4	0,80	8	1000	16000
10,5	+0,22	02320067	16	-0,3	1,6	1,0	10	1000	8000
13	+0,27	02320075	18	-0,3	1,7	1,0	12	500	8000
15	+0,27	02320083	21	-0,35	2	1,2	14	500	4000
17	+0,27	02320091	24	-0,35	2,1	1,2	16	500	4000

Material specifications:
SPRING STEEL
HRc 43÷49 (HV 425-495)

Surface treatment:
Anti-rust oil-dipped

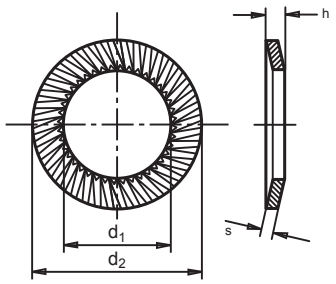

AET
Serrated disc washer for DIN 912 bolts

Information

The AET washer was designed specifically for applications where the outer diameter of the washer cannot exceed that of the bolt head.
Thanks to the conical form of this washer, the tightening torque is spread evenly in all applications. The serrated surfaces are incrusted into the head of the bolt or screw and also into the surface of the part which is being fastened, forming an immobile unit resistant to loosening if subjected to vibration.
This washer is suitable for use with a wide range of screws and bolts. It is very useful for use in mechanical assemblies where a locking function is essential. The elasticity of this washer compensates for axial forces avoiding lateral movement and unwanted grating noises.
The AET washer is particularly recommended for use for bolts manufactured according to DIN 74 and DIN 912 due to the perfect fit.

AET Serrated disc washer for DIN 912 bolts WHITE ZINC-PLATED

Diameter d_1		Part nº AET	d_2		h Maximum	s	For Metric bolt M	Box quantity	Outer box quantity
3,2	+0,18	22320012	5,5	-0,2	0,85	0,45	3	1000	64000
4,3	+0,18	22320020	7	-0,25	0,95	0,5	4	1000	64000
5,3	+0,18	22320039	9	-0,25	1,05	0,6	5	1000	64000
6,4	+0,22	22320047	10	-0,25	1,2	0,7	6	1000	16000
8,4	+0,22	22320055	13	-0,3	1,4	0,8	8	1000	16000
10,5	+0,22	22320063	16	-0,3	1,6	1	10	1000	8000
13	+0,27	22320071	18	-0,3	1,7	1	12	500	8000
15	+0,27	22320080	21	-0,35	2	1,2	14	500	4000
17	+0,27	22320098	24	-0,35	2,1	1,2	16	500	4000

Material specifications:
SPRING STEEL
HRc 43÷49 (HV 425-495)

Surface treatment:
White Zinc-Plated

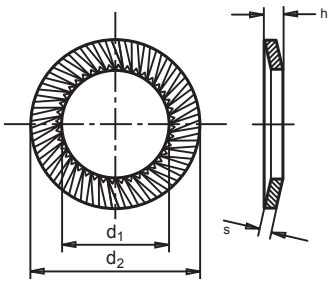

DIN 137 Curved spring washer (Form A)

Information

This washer is used in assemblies involving aluminium, plastic parts or insulating material etc. It is also recommended for locking assemblies where there is danger of damage to a painted or enameled surface. In electronics applications this washer is used to immobilize electrical contacts. Moderate tightening torque should be used with this washer.

DIN 137 Curved spring washer (Form A)

Diameter d_1		Part n° DIN 137-A	d_2		s_1		h_1 min.	h_1 max.	Box quantity	Outer box quantity
2,2	+0,25	01080010	4,5	±0,37	0,3	±0,03	0,5	1	10000	160000
2,5	+0,25	01080028	5	±0,37	0,3	±0,03	0,5	1	10000	160000
3,2	+0,3	01080044	6	±0,37	0,4	±0,05	0,65	1,3	5000	80000
4,3	+0,3	01080060	8	±0,45	0,5	±0,05	0,8	1,6	3000	48000
5,3	+0,3	01080079	10	±0,45	0,5	±0,05	0,9	1,8	2000	32000
6,4	+0,36	01080087	11	±0,45	0,5	±0,05	1,1	2,2	1250	20000
7,4	+0,36	01080095	12	±0,45	0,5	±0,05	1,2	2,4	3000	24000
8,4	+0,36	01080108	15	±0,45	0,5	±0,05	1,7	3,4	1250	20000
10,5	+0,43	01080116	18	±0,45	0,8	±0,06	2	4	1000	8000

Material specifications:
SPRING STEEL
HRc 44÷51 (HV 430-530)

Surface treatment:
Anti-rust oil-dipped

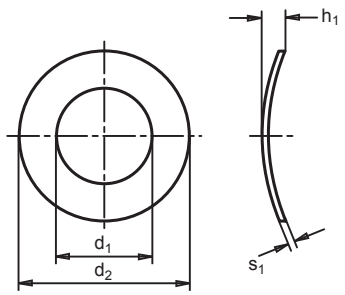

DIN 137 Wave spring washer (Form B)

Information

This washer is used in assemblies involving aluminium, plastic parts or insulating material etc. It is also recommended for locking assemblies where there is danger of damage to a painted or enameled surface. In electronics applications this washer is used to immobilize electrical contacts. This washer can be used with bolts requiring high tightening torque.

DIN 137 Wave spring washer (Form B)

Diameter d_1		Part nº DIN 137-B	d_2		s_1		h_1 min.	h_1 max.	Box quantity	Outer box quantity
3,2	+0,3	01081311	8	±0,45	0,5	±0,05	0,8	1,60	2500	64000
3,7	+0,3	01081338	8	±0,45	0,5	±0,05	0,9	1,8	2500	40000
4,3	+0,3	01081012	9	±0,45	0,5	±0,05	1	2	2000	32000
5,3	+0,3	01081020	11	±0,55	0,5	±0,05	1,1	2,2	1500	24000
6,4	+0,36	01081039	12	±0,55	0,5	±0,05	1,3	2,6	1000	16000
7,4	+0,36	01081047	14	±0,55	0,8	±0,05	1,5	3	1500	12000
8,4	+0,36	01081055	15	±0,55	0,8	±0,06	1,5	3	1250	10000
10,5	+0,43	01081063	21	±0,65	1	±0,06	2,1	4,2	1500	6000
13	+0,43	01081071	24	±0,65	1,2	±0,07	2,5	5	750	6000
15	+0,43	01081080	28	±0,65	1,6	±0,07	3	5,9	350	2800
17	+0,43	01081098	30	±0,65	1,6	±0,08	3,2	6,3	300	2400
19	+0,52	01081100	34	±0,8	1,6	±0,08	3,3	6,5	250	2000
21	+0,52	01081119	36	±0,8	1,6	±0,08	3,7	7,40	200	2000
23	+0,52	01081127	40	±0,8	1,8	±0,10	4,1	8,20	150	2000

Material specifications:
SPRING STEEL
HRc 44÷51 (HV 430-530)

Surface treatment:
Anti-rust oil-dipped

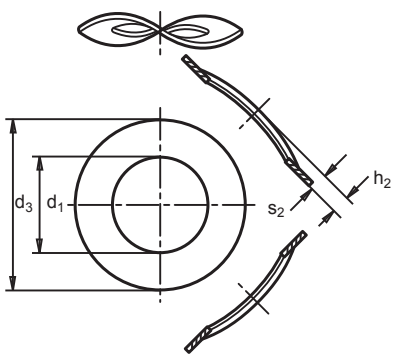

ANR Internal ribbed automotive washer

Information

The ANR washer should be used when the diameter of the washer chosen has to be far greater than the diameter of the hole or groove in order to ensure sufficient contact area. The advantage of the use of the ANR washer is that the specific pressure is spread over a greater surface area in materials which are softer than steel.

This washer is used in panel assembly using holes and groves which are much bigger than the diameter of the screw or bolt, in order to achieve evenly distributed pressure over the entire area of contact. It is also recommended for assembly where a spring function is required, as the conical form of this washer allows the teeth of this washer to lock into the screw or bolt.

ANR Internal ribbed automotive washer

Diameter d_1		Part nº ANR	d_2		s	=h	Box quantity	Outer box quantity
4,1	+0,3	02140012	11	±0,2	0,6	1,4	1000	16000
5,1	+0,3	02140020	12	±0,2	0,8	1,5	1000	16000
5,1	+0,3	02140266	14	±0,2	1	1,8	1000	8000
5,1	+0,3	02140303	16	±0,2	0,8	221	1000	8000
5,1	+0,3	02140055	18	±0,2	0,7	,7	1000	8000
6,1	+0,3	02140039	14	±0,2	0,9	1,9	1000	16000
6,1	+0,3	02140047	16	±0,2	1	2,1	1000	8000
6,4	+0,3	02140240	18	+0,3/ -0,2	1,2	2,5	1000	8000
6,5	+0,3	02140311	22	+0,3/-0,2	0,9	1,8	1000	4000
8,1	+0,3	02140071	16	+0,3/-0,2	1,2	2,5	1000	8000
8,1	+0,3	02140231	22	+0,3/-0,2	1,8	3,7	1000	4000
8,2	+0,3	02140290	26	+0,3/-0,2	1,4	2,9	1000	4000
10,2	+0,4	02140258	26	+0,3/-0,2	1,4	2,9	1000	4000

Material specifications:
SPRING STEEL
HRc 40÷50 (HV 400-510)

Surface treatment:
Anti-rust oil-dipped

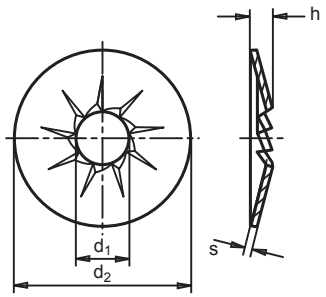

DIN 6799
E-type circlip

Information

The DIN 6799 circlip can be used in many different applications and is particularly useful with small diameter axles and shafts as it can handle high radial forces.
The design of the inner edge allows DIN 6799 to reach the very bottom of the groove, meaning that unnecessary wear and tear caused by movement due to a poor fit can be avoided.

DIN 6799 E-type circlip

Diameter d_1		Part nº DIN 6799	d_2 Max.	a		d_4 from	d_4 to	m		n min.	Surface Treatment	Box quantity	Outer box quantity
1,2	-0,06	01110028	3,25	1,01	±0,04	1,4	2	0,34	+0,04	0,6	A	3000	60000
1,5	-0,06	01110036	4,25	1,28	±0,04	2	2,5	0,44	+0,04	0,8	A	10000	640000
1,9	-0,06	01110044	4,8	1,61	±0,04	2,5	3	0,54	+0,05	1	A	10000	640000
2,3	-0,06	01110052	6,3	1,94	±0,04	3	4	0,64	+0,05	1	F	5000	160000
3,2	-0,075	01110060	7,3	2,7	±0,04	4	5	0,64	+0,05	1	F	5000	80000
4	-0,075	01110079	9,3	3,34	±0,048	5	7	0,74	+0,05	1,2	F	2500	40000
5	-0,075	01110087	11,3	4,11	±0,048	6	8	0,74	+0,05	1,2	F	1250	20000
6	-0,075	01110095	12,3	5,26	±0,048	7	9	0,74	+0,05	1,2	F	2500	40000
7	-0,09	01110108	14,3	5,84	±0,048	8	11	0,94	+0,05	1,5	F	2500	40000
8	-0,09	01110116	16,3	6,52	±0,058	9	12	1,05	+0,08	1,8	F	2000	16000
9	-0,09	01110124	18,8	7,63	±0,058	10	14	1,15	+0,08	2	F	1000	8000
10	-0,09	01110132	20,4	8,32	±0,058	11	15	1,25	+0,08	2	F	750	12000
12	-0,11	01110140	23,4	10,45	±0,07	13	18	1,35	+0,08	2,5	F	1000	8000
15	-0,11	01110159	29,4	12,61	±0,07	16	24	1,55	+0,08	3	F	500	4000
19	-0,13	01110167	37,6	15,92	±0,07	20	31	1,8	+0,08	3,5	F	250	2000
24	-0,13	01110175	44,6	21,88	±0,08	25	38	2,05	+0,08	4	F	200	1600

DIN 6799 E-type circlip CARTRIDGES

Diameter d_1	Part nº Cartridges	Surface Treatment	Box quantity	Outer box quantity
1,5	03060522	A	99900	99900
1,9	03060534	A	100100	100100
2,3	03060544	F	48000	48000
3,2	03060550	F	36000	36000
4	03060566	F	15000	15000
5	03060578	F	12000	12000
6	03060588	F	10000	10000

Material specifications:
SPRING STEEL
HRc 46÷54 (HV 460-580)

Surface treatment:
Anti-rust oil-dipped*
Remainder d1 = Phosphated
A = Oiled
F = Phosphated

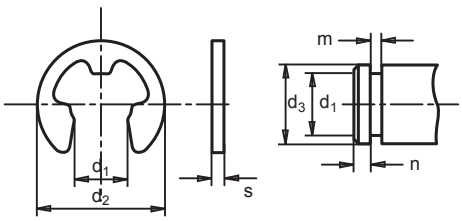

MIKALOR

CIRCLIPS

CIRCLIPS

DIN 471-E External Circlip

Information

The DIN 471-External circlip is the most common form of safety device for shafts with external grooves. The DIN 471 Circlip is used to fasten elements such as freewheels or levers to shafts. It can transmit considerable axial forces from the part of the machine which exerts the force to the groove in which the circlip is fitted.

DIN 471-E External Circlip

Nominal Diameter	Part nº DIN 471-E	s		a max.	b=	d_3		Surface Treatment	d_5 min.	Box quantity	Outer box quantity
3	01090013	0,4	-0,05	1,9	0,8	2,7	+0,04/-0,15	A	1	1000	64000
4	01090021	0,4	-0,05	2,2	0,9	3,7	+0,04/-0,15	F	1	5000	160000
5	01090030	0,6	-0,05	2,5	1,1	4,7	+0,04/-0,15	F	1	2500	160000
6	01090048	0,7	-0,05	2,7	1,3	5,6	+0,04/-0,15	F	1,2	2500	80000
7	01090056	0,8	-0,05	3,1	1,4	6,5	+0,06/-0,18	F	1,2	1500	48000
8	01090064	0,8	-0,05	3,2	1,5	7,4	+0,06/-0,18	F	1,2	4000	32000
9	01090072	1	-0,06	3,3	1,7	8,4	+0,06/-0,18	F	1,2	2000	32000
10	01090080	1	-0,06	3,3	1,8	9,3	+0,10/-0,36	F	1,2	1500	24000
11	01090099	1	-0,06	3,3	1,8	10,2	+0,10/-0,36	F	1,5	1500	12000
12	01090101	1	-0,06	3,3	1,8	11	+0,10/-0,36	F	1,5	1000	16000
13	01090128	1	-0,06	3,4	2	11,9	+0,10/-0,36	F	1,7	1000	16000
14	01090136	1	-0,06	3,5	2,1	12,9	+0,10/-0,36	F	1,7	1000	8000
15	01090144	1	-0,06	3,6	2,2	13,8	+0,10/-0,36	F	1,7	1000	8000
16	01090152	1	-0,06	3,7	2,2	14,7	+0,10/-0,36	F	1,7	1000	8000
17	01090160	1	-0,06	3,8	2,3	15,7	+0,10/-0,36	F	1,7	1000	8000
18	01090179	1,2	-0,06	3,9	2,4	16,5	+0,10/-0,36	F	1,7	1000	8000
19	01090187	1,2	-0,06	3,9	2,5	17,5	+0,10/-0,36	F	2	1000	8000
20	01090195	1,2	-0,06	4	2,6	18,5	+0,13/-0,42	F	2	1000	8000
21	01090208	1,2	-0,06	4,1	2,7	19,5	+0,13/-0,42	F	2	1000	8000
22	01090216	1,2	-0,06	4,2	2,8	20,5	+0,13/-0,42	F	2	500	4000
24	01090232	1,2	-0,06	4,4	3	22,2	+0,21/-0,42	F	2	500	4000
25	01090240	1,2	-0,06	4,4	3	23,2	+0,21/-0,42	F	2	500	4000
26	01090259	1,2	-0,06	4,5	3,1	24,2	+0,21/-0,42	F	2	500	4000
27	01090849	1,2	-0,06	4,6	3,1	24,9	+0,21/-0,42	F	2	500	2000
28	01090267	1,5	-0,06	4,7	3,2	25,9	+0,21/-0,42	F	2	250	2000
29	01090275	1,5	-0,06	4,8	3,4	26,9	+0,21/-0,42	F	2	250	2000
30	01090283	1,5	-0,06	5	3,5	27,9	+0,21/-0,42	F	2	250	2000
32	01090304	1,5	-0,06	5,2	3,6	29,6	+0,21/-0,42	F	2,5	250	2000
33	01090873	1,5	-0,06	5,2	3,7	30,5	+0,25/-0,5	F	2,5	250	2000
34	01090312	1,5	-0,06	5,4	3,8	31,5	+0,25/-0,5	F	2,5	250	2000
35	01090320	1,5	-0,06	5,6	3,9	32,2	+0,25/-0,5	F	2,5	250	2000
36	01090339	1,75	-0,06	5,6	4	33,2	+0,25/-0,5	A	2,5	100	1600
38	01090347	1,75	-0,06	5,8	4,2	35,2	+0,25/-0,5	A	2,5	100	800
40	01090355	1,75	-0,06	6	4,4	36,5	+0,39/-0,9	A	2,5	100	800
42	01090363	1,75	-0,06	6,5	4,5	38,5	+0,39/-0,9	A	2,5	100	1600
44	01090881	1,75	-0,06	6,6	4,6	40,5	+0,39/-0,9	A	2,5	100	800
45	01090371	1,75	-0,06	6,7	4,7	41,5	+0,39/-0,9	A	2,5	100	800
46	01090857	1,75	-0,06	6,7	4,8	42,5	+0,39/-0,9	A	2,5	100	800
47	01090865	1,75	-0,06	6,8	4,9	43,5	+0,39/-0,9	A	2,5	100	800
48	01090380	1,75	-0,06	6,9	5	44,5	+0,39/-0,9	A	2,5	100	800
50	01090398	2	-0,07	6,9	5,1	45,8	+0,39/-0,9	A	2,5	100	800

*** For diameters over 200mm, please consult for details on availability.**

DIN 471-E External Circlip

Nominal Diameter	Part nº DIN 471-E	s		a max.	b=	d_3		Surface Treatment	d_5 min.	Box quantity	Outer box quantity
52	01090400	2	-0,07	7	5,2	47,8	+0,39 / -0,9	A	2,5	100	800
55	01090419	2	-0,07	7,2	5,4	50,8	+0,46 / -1,1	A	2,5	100	800
56	01090427	2	-0,07	7,3	5,5	51,8	+0,46 / -1,1	A	2,5	100	400
58	01090435	2	-0,07	7,3	5,6	53,8	+0,46 / -1,1	A	2,5	100	400
60	01090443	2	-0,07	7,4	5,8	55,8	+0,46 / -1,1	A	2,5	100	800
62	01090451	2	-0,07	7,5	6	57,8	+0,46 / -1,1	A	2,5	100	400
63	01090460	2	-0,07	7,6	6,2	58,8	+0,46 / -1,1	A	2,5	100	400
65	01090478	2,5	-0,07	7,8	6,3	60,8	+0,46 / -1,1	A	3	75	300
68	01090486	2,5	-0,07	8	6,5	63,5	+0,46 / -1,1	A	3	75	300
70	01090494	2,5	-0,07	8,1	6,6	65,5	+0,46 / -1,1	A	3	75	300
72	01090507	2,5	-0,07	8,2	6,8	67,5	+0,46 / -1,1	A	3	75	600
75	01090515	2,5	-0,07	8,4	7	70,5	+0,46 / -1,1	A	3	75	600
78	01090531	2,5	-0,07	8,6	7,3	73,5	+0,46 / -1,1	A	3	75	600
80	01090540	2,5	-0,07	8,6	7,4	74,5	+0,46 / -1,1	A	3	75	600
82	01090558	2,5	-0,07	8,7	7,6	76,5	+0,46 / -1,1	A	3	75	600
85	01090566	3	-0,07	8,7	7,8	79,5	+0,46 / -1,1	A	3,5	50	400
90	01090582	3	-0,07	8,8	8,2	84,5	+0,54/-1,08	A	3,5	50	400
92	01090910	3	-0,08	9	8,4	86,5	+0,54/-1,3	A	3,5	50	800
95	01090590	3	-0,07	9,4	8,6	89,5	+0,54/-1,08	A	3,5	50	400
100	01090603	3	-0,07	9,6	9	94,5	+0,54/-1,08	A	3,5	50	400
105	01090611	4	-0,07	9,9	9,3	98	+0,54/-1,08	A	3,5	40	160
110	01090620	4	-0,07	10,1	9,6	103	+0,54/-1,08	A	3,5	40	160
115	01090638	4	-0,07	10,6	9,8	108	+0,54/-1,08	A	3,5	40	160
120	01090646	4	-0,07	11	10,2	113	+0,54/-1,08	A	3,5	40	160
125	01090654	4	-0,07	11,4	10,4	118	+0,54/-1,08	A	4	40	160
130	01090662	4	-0,07	11,6	10,7	123	+0,63/-1,26	A	4	40	160
135	01090670	4	-0,07	11,8	11	128	+0,63/-1,26	A	4	40	160
140	01090689	4	-0,07	12	11,2	133	+0,63/-1,26	A	4	40	160
145	01090697	4	-0,07	12,2	11,5	138	+0,63/-1,26	A	4	40	160
150	01090700	4	-0,07	13	11,8	142	+0,63/-1,26	A	4	40	160
160	01090726	4	-0,1	13,3	12,2	151	+0,63/-1,5	A	4	40	40
170	01090742	4	-0,1	13,5	12,9	160,5	+0,63/-1,5	A	4	40	40
175	01090750	4	-0,1	13,5	12,9	165,5	+0,63/-1,5	A	4	40	40
180	01090769	4	-0,1	14,2	13,5	170,5	+0,63/-1,5	A	4	40	40
185	01090777	4	-0,1	14,2	13,5	175,5	+0,63/-1,5	A	4	40	40
190	01090785	4	-0,1	14,2	14	180,5	+0,72/-1,7	A	4	40	40
195	01090793	4	-0,1	14,2	14	185,5	+0,72/-1,7	A	4	40	40
200	01090806	4	-0,1	14,2	14	190,5	+0,72/-1,7	A	4	40	40

Material specifications:

SPRING STEEL
< ø49 HRc 47÷54 (HV 470-580)
> ø50 HRc 44÷51 (HV 435-530)

Surface treatment:

A = Anti-rust oil-dipped
F = Phosphated

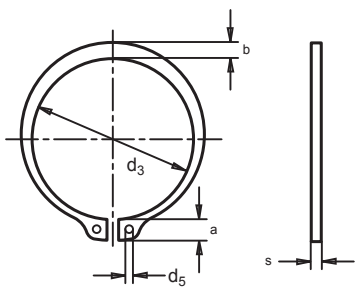

DIN 472-I Internal Circlip

Information

The DIN 472-Internal circlip is the most common form of safety device for shafts with internal grooves. It can transmit considerable axial forces from the part of the machine which exerts the force to the groove in which the circlip is fitted.

DIN 472-E External Circlip

Nominal Diameter	Part nº DIN 472-I	s		a max.	b=	d_3		Surface Treatment	d_5 min.	Box quantity	Outer box quantity
8	01095017	0,8	-0,05	2,4	1,1	8,7	+0,36 / -0,10	A	1	2500	40000
9	01095025	0,8	-0,05	2,5	1,3	9,8	+0,36 / -0,10	A	1	4000	64000
10	01095033	1	-0,06	3,2	1,4	10,8	+0,36 / -0,10	A	1,2	3000	24000
11	01095041	1	-0,06	3,3	1,5	11,8	+0,36 / -0,10	A	1,2	2500	20000
12	01095050	1	-0,06	3,4	1,7	13	+0,36 / -0,10	A	1,5	1000	16000
13	01095068	1	-0,06	3,6	1,8	14,1	+0,36 / -0,10	A	1,5	2500	20000
14	01095076	1	-0,06	3,7	1,9	15,1	+0,36 / -0,10	A	1,7	1000	16000
15	01095084	1	-0,06	3,7	2	16,2	+0,36 / -0,10	A	1,7	2500	20000
16	01095092	1	-0,06	3,8	2	17,3	+0,36 / -0,10	A	1,7	2000	16000
17	01095105	1	-0,06	3,9	2,1	18,3	+0,42 / -0,13	A	1,7	2000	16000
18	01095113	1	-0,06	4,1	2,2	19,5	+0,42 / -0,13	F	2	200	8000
19	01095121	1	-0,06	4,1	2,2	20,5	+0,42 / -0,13	F	2	200	3200
20	01095130	1	-0,06	4,2	2,3	21,5	+0,42 / -0,13	F	2	200	3200
21	01095148	1	-0,06	4,2	2,4	22,5	+0,42 / -0,13	F	2	200	3200
22	01095156	1	-0,06	4,2	2,5	23,5	+0,42 / -0,13	F	2	200	3200
24	01095172	1,2	-0,06	4,4	2,6	25,9	+0,42 / -0,21	F	2	170	2720
25	01095180	1,2	-0,06	4.5	2,7	26,9	+0,42 / -0,21	F	2	170	2720
26	01095199	1,2	-0,06	4,7	2,8	27,9	+0,42 / -0,21	F	2	170	2720
27	01095200	1,2	-0,06	4,7	2,9	29,1	+0,5 / -0,25	F	2	200	3200
28	01095210	1,2	-0,06	4,8	2,9	30,1	+0,5 / -0,25	F	2	170	2720
29	01095885	1,2	-0,06	4,8	3,0	31,1	+0,5 / -0,25	F	2	200	3200
30	01095228	1,2	-0,06	4,8	3	32,1	+0,5 / -0,25	F	2	170	2720
31	01095236	1,2	-0,06	5,2	3,2	33,4	+0,5 / -0,25	F	2,5	170	2720
32	01095244	1,2	-0,06	5,4	3,2	34,4	+0,5 / -0,25	F	2,5	170	2720
33	01095893	1,2	-0,06	5,4	3,3	35,5	+0,5 / -0,25	F	2,5	200	3200
34	01095252	1,5	-0,06	5,4	3,3	36,5	+0,5 / -0,25	F	2,5	125	2000
35	01095260	1,5	-0,06	5,4	3,4	37,8	+0,5 / -0,25	F	2,5	125	1000
36	01095279	1,5	-0,06	5,4	3,5	38,8	+0,5 / -0,25	F	2,5	125	1000
37	01095287	1,5	-0,06	5,5	3,6	39,8	+0,5 / -0,25	F	2,5	125	2000
38	01095295	1,5	-0,06	5,5	3,7	40,8	+0,5 / -0,25	F	2,5	125	1000
40	01095308	1,5	-0,06	5,8	3,9	43,5	+0,9 / -0,39	F	2,5	100	1600
41	01095906	1,75	-0,06	5,9	4,0	44,5	+0,9 / -0,39	F	2,5	100	1600
42	01095316	1,75	-0,06	5,9	4,1	45,5	+0,9 / -0,39	F	2,5	100	1600
44	01095324	1,75	-0,06	6,0	4,2	47,5	+0,9 / -0,39	F	2,5	100	1600
45	01095332	1,75	-0,06	6,2	4,3	48,5	+0,9 / -0,39	F	2,5	100	1600
46	01095922	1,75	-0,06	6,3	4,4	47,5	+0,9 / -0,39	F	2,5	100	1600
47	01095340	1,75	-0,06	6,4	4,4	50,5	+1,1 / -0,46	F	2,5	100	1600
48	01095359	1,75	-0,06	6,4	4,5	51,5	+1,1 / -0,46	F	2,5	100	1600
50	01095367	2	-0,07	6,5	4,6	54,2	+1,1 / -0,46	F	2,5	100	1600
52	01095375	2	-0,07	6,7	4,7	56,2	+1,1 / -0,46	F	2,5	100	800
55	01095391	2	-0,07	6,8	5	59,2	+1,1 / -0,46	F	2,5	100	800
56	01095404	2	-0,07	6,8	5,1	60,2	+1,1 / -0,46	F	2,5	100	800

*** For diameters over 200mm, please consult for details on availability.**

DIN 472-E External Circlip

Nominal Diameter	Part nº DIN 472-I	s		a max.	b=	d_3		Surface Treatment	d_5 min.	Box quantity	Outer box quantity
58	01095412	2	-0,07	6,9	5,2	62,2	+1,1 / -0,46	F	2,5	100	800
60	01095420	2	-0,07	7,3	5,4	64,2	+1,1 / -0,46	F	2,5	100	800
62	01095439	2	-0,07	7,3	5,5	66,2	+1,1 / -0,46	F	2,5	100	800
63	01095447	2	-0,07	7,3	5,6	67,2	+1,1 / -0,46	F	2,5	100	800
65	01095463	2,5	-0,07	7,6	5,8	69,2	+1,1 / -0,46	F	3	75	600
68	01095471	2,5	-0,07	7,8	6,1	72,5	+1,1 / -0,46	F	3	75	600
70	01095480	2,5	-0,07	7,8	6,2	74,5	+1,1 / -0,46	F	3	75	600
72	01095498	2,5	-0,07	7,8	6,4	76,5	+1,1 / -0,46	F	3	75	600
75	01095500	2,5	-0,07	7,8	6,6	79,5	+1,1 / -0,46	F	3	75	600
78	01095527	2,5	-0,07	8,5	6,8	82,5	+1,3 / -0,54	F	3	75	600
80	01095535	2,5	-0,07	8,5	7	85,5	+1,3 / -0,54	F	3	75	600
82	01095543	2,5	-0,07	8,5	7	87,5	+1,3 / -0,54	F	3	75	600
85	01095551	3	-0,07	8,6	7,2	90,5	+1,08/ -0,54	F	3,5	50	400
90	01095578	3	-0,07	8,6	7,6	95,5	+1,08/ -0,54	F	3,5	50	400
92	01095586	3	-0,08	8,7	7,8	97,5	+1,3/ -0,54	F	3,5	50	200
95	01095594	3	-0,07	8,8	8,1	100,5	+1,08/ -0,54	F	3,5	50	400
98	01095607	3	-0,08	9,0	8,3	103,5	+1,3/ -0,54	F	3,5	50	200
100	01095615	3	-0,07	9	8,4	100,5	+1,08/ -0,54	F	3,5	50	400
102	01095623	4	-0,1	9,5	8,5	108	+1,3/ -0,54	A	3,5	25	200
105	01095631	4	-0,07	9,5	8,7	112	+1,08/ -0,54	A	3,5	40	160
110	01095658	4	-0,07	10,4	9	117	+1,08/ -0,54	A	3,5	40	160
112	01095666	4	-0,1	10,5	9,1	119	+1,5/ -0,63	A	3,5	40	200
115	01095674	4	-0,07	10,5	9,3	122	+1,26/ -0,63	A	3,5	40	160
120	01095682	4	-0,07	11	9,7	127	+1,26/ -0,63	A	3,5	40	160
125	01095690	4	-0,07	11	10	132	+1,26/ -0,63	A	4	40	160
130	01095703	4	-0,07	11	10,2	137	+1,26/ -0,63	A	4	40	160
135	01095711	4	-0,07	11,2	10,5	142	+1,26/ -0,63	A	4	40	160
140	01095720	4	-0,07	11,2	10,7	147	+1,26/ -0,63	A	4	40	160
145	01095738	4	-0,07	11,4	10,9	152	+1,26/ -0,63	A	4	40	160
150	01095746	4	-0,07	12	11,2	158	+1,26/ -0,63	A	4	40	160
155	01095754	4	-0,1	12,0	11,4	164	+1,5/ -0,63	A	4	40	160
160	01095762	4	-0,1	13,0	11,6	169	+1,5/ -0,63	A	4	40	160
165	01095770	4	-0,1	13,0	11,8	174,5	+1,5/ -0,63	A	4	40	40
170	01095789	4	-0,1	13,5	12,2	179,5	+1,5/ -0,63	A	4	40	40
175	01095797	4	-0,1	13,5	12,7	184,5	+1,7/ -0,72	A	4	40	40
180	01095800	4	-0,1	14,2	13,2	189,5	+1,7/ -0,72	A	4	40	40
185	01095818	4	-0,1	14,2	13,7	194,5	+1,7/ -0,72	A	4	40	40
190	01095826	4	-0,1	14,2	13,8	199,5	+1,7/ -0,72	A	4	40	40
195	01095834	4	-0,1	14,2	13,8	204,5	+1,7/ -0,72	A	4	40	40
200	01095842	4	-0,1	14,2	14	209,5	+1,7/ -0,72	A	4	40	40

Material specifications:

SPRING STEEL
< ø49 HRc 47÷54 (HV 470-580)
> ø50 HRc 44÷51 (HV 435-530)

Surface treatment:

A = Anti-rust oil-dipped
F = Phosphated

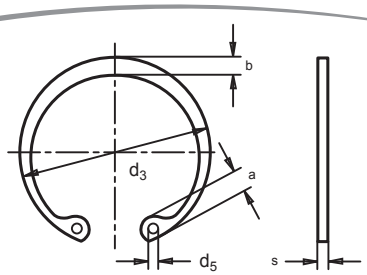

MIKALOR

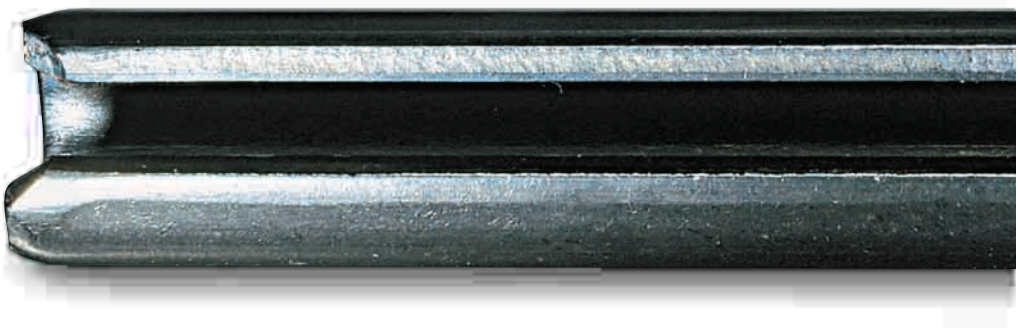

SPRING PINS

DIN 1481
Heavy-duty spring pin

Information

A spring pin is a hollow cylinder which has a longitudinal slit from one end to the other. It has a diameter greater than the nominal diameter of the circular slot where it is to be fitted. When the spring pin is introduced in the hole it is compressed and retained due to the elastic force which it exerts on the walls of the slot. The longitudinal slit narrows but stays slightly open.

DIN 1481 Heavy-duty spring pin

Ø Application	Ø 1,5	Ø 2	Ø 2,5	Ø 3	Ø 3,5
s	0,3	0,4	0,5	0,6	0,75
d_1	1,7/+0,1	2,3/+0,1	2,8/+0,1	3,3/+0,2	3,8/+0,2
L	(4-20)	(4÷30)	(5÷30)	(5÷50)	(8÷50)

Ø x L	Part nº DIN 1481	Box quantity	Outer box quantity	Ø x L	Part nº DIN 1481	Box quantity	Outer box quantity
1,5x4	01100016	1000	64000	3x10	01100454	1000	16000
1,5x5	01100024	1000	64000	3x12	01100462	1000	16000
1,5x6	01100032	1000	64000	3x14	01100470	1000	16000
1,5x8	01100040	1000	64000	3x16	01100489	1000	16000
1,5x10	01100059	1000	64000	3x18	01100497	1000	16000
1,5x12	01100067	1000	64000	3x20	01100500	1000	16000
1,5x14	01100075	1000	64000	3x22	01100518	1000	16000
1,5x16	01100083	1000	64000	3x24	01100526	1000	16000
1,5x18	01100091	1000	16000	3x26	01100534	1000	8000
1,5x20	01100104	1000	16000	3x28	01100542	1000	8000
2x4	01100112	1000	64000	3x30	01100550	1000	8000
2x5	01100120	1000	64000	3x32	01100569	1000	8000
2x6	01100139	1000	64000	3x36	01100577	1000	8000
2x8	01100147	1000	64000	3x40	01100585	1000	8000
2x10	01100155	1000	64000	3x45	01103129	1000	8000
2x12	01100163	1000	64000	3x50	01103110	1000	8000
2x14	01100171	1000	64000	3,5x6	01103410	1000	16000
2x16	01100180	1000	16000	3,5x8	01103428	1000	16000
2x18	01100198	1000	16000	3,5x10	01103436	1000	16000
2x20	01100200	1000	16000	3,5x12	01103444	1000	16000
2x22	01100219	1000	16000	3,5x14	01103452	1000	16000
2x24	01100227	1000	16000	3,5x16	01103460	1000	16000
2x26	01100235	1000	16000	3,5x18	01103479	1000	16000
2x28	01100243	1000	16000	3,5x20	01103487	1000	16000
2x30	01100251	1000	8000	3,5x22	01103495	1000	16000
2,5x5	01100278	1000	64000	3,5x24	01103508	1000	8000
2,5x6	01100286	1000	64000	3,5x26	01103516	1000	8000
2,5x8	01100294	1000	64000	3,5x28	01103524	1000	8000
2,5x10	01100307	1000	32000	3,5x30	01103532	1000	8000
2,5x12	01100315	1000	32000	3,5x32	01103540	1000	8000
2,5x14	01100323	1000	16000	3,5x36	01103559	1000	8000
2,5x16	01100331	1000	16000	3,5x40	01103567	1000	8000
2,5x18	01100340	1000	16000	3,5x45	01103575	1000	8000
2,5x20	01100358	1000	16000	3,5x50	01103583	1000	8000
2,5x22	01100366	1000	16000	4x8	01100622	500	8000
2,5x24	01100374	1000	16000	4x10	01100630	500	8000
2,5x26	01100382	1000	16000	4x12	01100649	500	8000
2,5x28	01100390	1000	8000	4x14	01100657	500	8000
2,5x30	01100403	1000	8000	4x16	01100665	500	8000
3x5	01100420	1000	64000	4x18	01100673	500	8000
3x6	01100438	1000	64000	4x20	01100681	500	8000
3x8	01100446	1000	64000	4x22	01100690	500	8000

DIN 1481 Heavy-duty spring pin

Ø Application	Ø 4	Ø 5	Ø 6
s	0,8	1	1,25
d_1	4,4/+0,2	5,4/+0,2	6,4/+0,3
L	(8÷50)	(10÷80)	(10÷100)

Ø x L	Part nº DIN 1481	Box quantity	Outer box quantity	Ø x L	Part nº DIN 1481	Box quantity	Outer box quantity
4x24	01100702	500	8000	6x22	01101107	500	4000
4x26	01100710	500	8000	6x24	01101115	500	4000
4x28	01100729	500	4000	6x26	01101123	500	4000
4x30	01100737	500	4000	6x28	01101131	500	4000
4x32	01100745	500	4000	6x30	01101140	500	4000
4x36	01100753	500	4000	6x32	01101158	500	4000
4x40	01100761	500	4000	6x36	01101166	500	2000
4x45	01100770	500	4000	6x40	01101174	500	2000
4x50	01100788	500	4000	6x45	01101182	500	2000
5x10	01100825	500	8000	6x50	01101190	500	2000
5x12	01100833	500	8000	6x55	01101203	500	2000
5x14	01100841	500	8000	6x60	01101211	500	2000
5x16	01100850	500	8000	6x65	01101220	500	2000
5x18	01100868	500	8000	6x70	01101238	500	2000
5x20	01100876	500	4000	6x75	01101246	500	2000
5x22	01100884	500	4000	6x80	01101254	500	2000
5x24	01100892	500	4000	6x85	01101262	500	2000
5x26	01100905	500	4000	6x90	01101270	500	2000
5x28	01100913	500	4000	6x95	01101289	500	2000
5x30	01100921	500	4000	6x100	01101297	500	2000
5x32	01100930	500	4000	7x18	01103170	200	32000
5x36	01100948	500	4000	7x20	01103188	200	32000
5x40	01100956	500	4000	7x22	01103196	200	32000
5x45	01100964	500	2000	7x24	01103209	200	32000
5x50	01100972	500	2000	7x26	01103217	200	32000
5x55	01100980	500	2000	7x28	01103225	200	32000
5x60	01100999	500	2000	7x30	01103233	200	1600
5x65	01101000	500	2000	7x32	01103241	200	1600
5x70	01101019	500	2000	7x36	01103250	200	1600
5x75	01101027	500	2000	7x40	01103268	200	1600
5x80	01101035	500	2000	7x45	01103276	200	1600
6x10	01101043	500	8000	7x50	01103284	200	1600
6x12	01101051	500	8000	7x55	01103292	200	1600
6x14	01101060	500	8000	7x60	01103305	200	1600
6x16	01101078	500	4000	7x65	01103313	200	800
6x18	01101086	500	4000	7x70	01103321	200	800
6x20	01101094	500	4000	7x75	01103330	200	800

Material specifications:
SPRING STEEL
HRc 43÷49 (HV 422-560)

Surface treatment:
Anti-rust oil-dipped

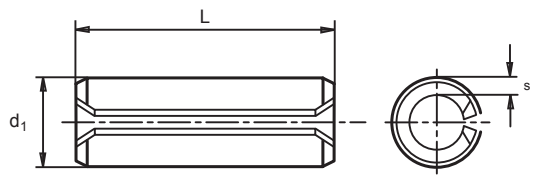

DIN 1481
Heavy-duty spring pin

Information

A spring pin is a hollow cylinder which has a longitudinal slit from one end to the other. It has a diameter greater than the nominal diameter of the circular slot where it is to be fitted. When the spring pin is introduced in the hole it is compressed and retained due to the elastic force which it exerts on the walls of the slot. The longitudinal slit narrows but stays slightly open.

DIN 1481 Heavy-duty spring pin

Ø Application	Ø 7	Ø 8
s	1,25	1,25
d_1	7,4/+0,3	8,4/+0,3
L	(12÷100)	(16÷120)

Ø x L	Part nº DIN 1481	Box quantity	Outer box quantity	Ø x L	Part nº DIN 1481	Box quantity	Outer box quantity
7x12	01103145	200	32000	8x55	01101465	200	800
7x14	01103153	200	32000	8x60	01101473	200	800
7x16	01103161	200	32000	8x65	01101481	200	800
7x80	01103348	200	800	8x70	01101490	200	800
7x85	01103356	200	800	8x75	01101502	200	800
7x90	01103364	200	800	8x80	01101510	200	800
7x95	01103372	200	800	8x85	01101529	200	800
7x100	01103380	200	800	8x90	01101537	200	800
8x16	01101334	200	3200	8x95	01101545	200	800
8x18	01101342	200	3200	8x100	01101553	200	800
8x20	01101350	200	1600	8x120	01101561	200	800
8x22	01101369	200	1600	10x14	01101596	100	1600
8x24	01101377	200	1600	10x20	01101625	100	1600
8x26	01101385	200	1600	10x22	01101633	100	1600
8x28	01101393	200	1600	10x24	01101641	100	1600
8x30	01101406	200	1600	10x26	01101650	100	800
8x32	01101414	200	1600	10x28	01101668	100	800
8x36	01101422	200	1600	10x30	01101676	100	800
8x40	01101430	200	1600	10x32	01101684	100	800
8x45	01101449	200	1600	10x36	01101692	100	800
8x50	01101457	200	800	10x40	01101705	100	800

DIN 1481 Heavy-duty spring pin

Ø 10	Ø 12
2	2,5
10,5/+0,3	12,5/+0,3
(20÷120)	(20÷120)

Ø x L.	Part nº DIN 1481	Box quantity	Outer box quantity	Ø x L	Part nº DIN 1481	Box quantity	Outer box quantity
10x45	01101713	100	800	12x30	01101967	100	800
10x50	01101721	100	800	12x32	01101975	100	800
10x55	01101730	100	800	12x36	01101983	100	800
10x60	01101748	100	800	12x40	01101991	100	800
10x65	01101756	100	400	12x45	01102003	100	400
10x70	01101764	100	400	12x50	01102011	100	400
10x75	01101772	100	400	12x55	01102020	100	400
10x80	01101780	100	400	12x60	01102038	100	400
10x85	01101799	100	400	12x65	01102046	100	400
10x90	01101801	100	400	12x70	01102054	100	400
10x95	01101810	100	400	12x75	01102062	100	400
10x100	01101828	100	400	12x80	01102070	100	400
10x120	01101836	100	400	12x85	01102089	100	400
12x20	01101916	100	800	12x90	01102097	100	400
12x22	01101924	100	800	12x95	01102100	100	400
12x24	01101932	100	800	12x100	01102118	100	400
12x26	01101940	100	800	12x120	01102126	100	400
12x28	01101959	100	800				

Material specifications:
SPRING STEEL
HRc 43÷49 (HV 422-560)

Surface treatment:
Anti-rust oil-dipped

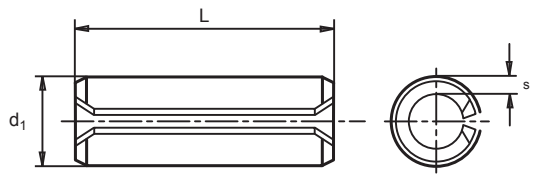

MIKALOR

NUTS

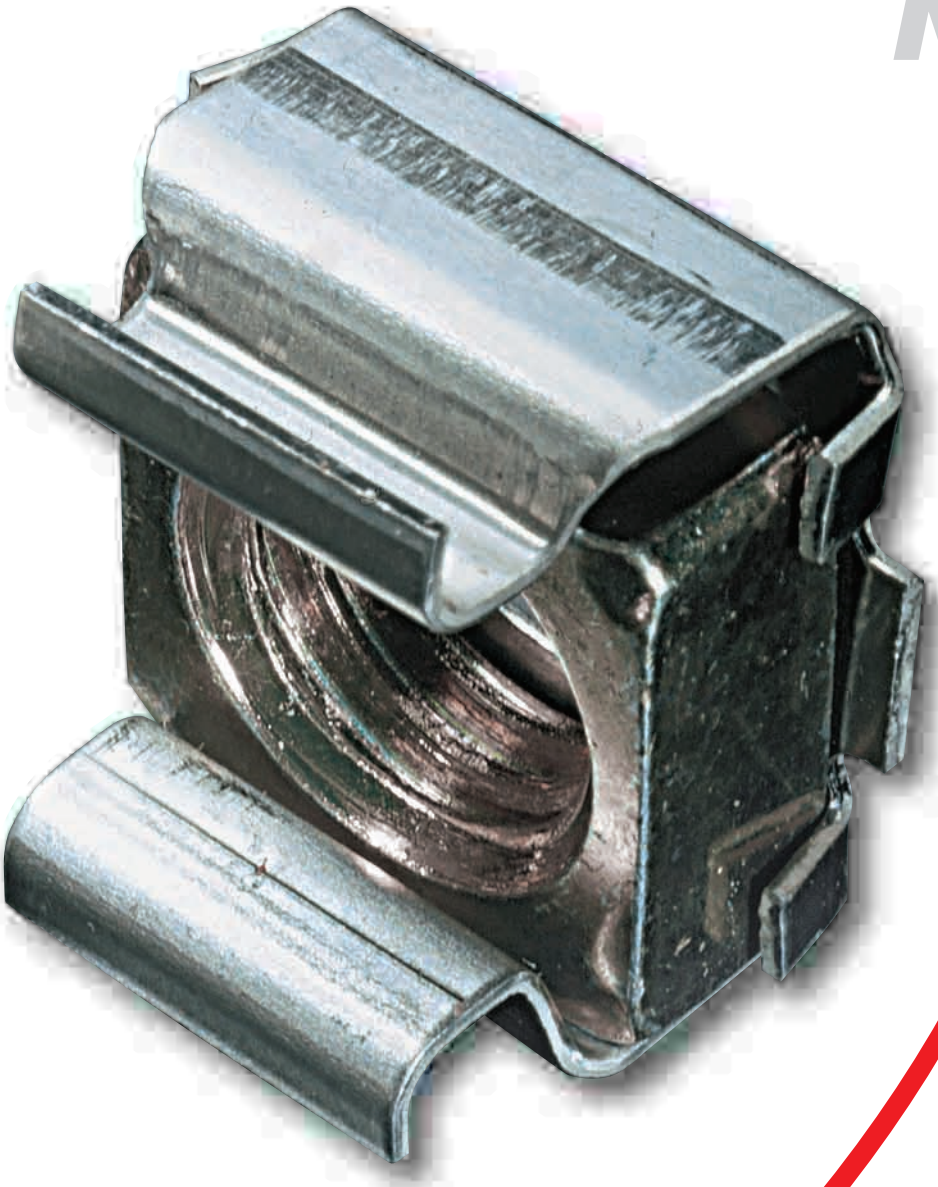

Standard cage nut

Information

Cage nuts combine the classic elastic properties of fasteners used for assembly with the strength of multi-threaded steel nuts. Cage nuts are designed to be used in any kind of assembly including blind assemblies and are particularly common in equipment racks. They can be fastened within their housing using bolts and subjected to considerable tightening torque or axial forces. No special tools or specialized fitters are required to mount these nuts. The use of cage nuts allows for a great reduction in assembly time, as costly operations such as tapping, welding or riveting can be avoided. Due to the fact that the nuts are slightly loose within the cage, minor adjustments in the alignment of the parts to be assembled are possible.

The cage of this model of nut fits into the assembly position within a square or rectangular hole and due to the elasticity and design of its wings it can be used with a wide range of panel thicknesses. Once mounted in the rectangular hole the cage stays in place while the captive nut can move within the cage to permit assembly.

Standard cage nut

For Metric bolt Nominal d	e	Part nº TN	D ±0,2	A ±0,6	J	F ±0,4	G ±0,3	r max.	Box quantity	Outer box quantity
M.3	(0,3-0,9)	03100511	9,3	4,8	5,3	9,7	3,6	0,25	500	4000
M.3	(1,0-1,6)	03100520	9,3	4,8	5,3	9,7	3,6	0,25	500	4000
M.3	(1,7-2,3)	03100538	9,3	4,8	5,3	9,7	3,6	0,25	500	4000
M.4	(0,3-0,9)	03100546	9,3	4,8	5,3	9,7	3,6	0,25	500	8000
M.4	(1,0-1,6)	03100554	9,3	4,8	5,3	9,7	3,6	0,25	500	4000
M.4	(1,7-2,3)	03100562	9,3	4,8	5,3	9,7	3,6	0,25	500	4000
M.4	(0,5-1,5)	03100010	12	7,2	8,3	12,2	6	1	500	4000
M.4	(1,6-2,5)	03100028	12	7,2	8,3	12,2	6	1	500	4000
M.4	(2,6-3,5)	03100036	12	7,2	8,3	12,2	6	1	500	4000
M.4	(0,7-1,6)	03100589	13,2	8,2	9,5	13,5	6	1	500	4000
M.4	(1,7-2,7)	03100597	13,2	8,2	9,5	13,5	6	1	500	4000
M.4	(2,7-3,5)	03100600	13,2	8,2	9,5	13,5	6	1	500	4000
M.5	(0,5-1,5)	03100044	12	7,2	8,3	12,2	6	1	200	3200
M.5	(1,6-2,5)	03100052	12	7,2	8,3	12,2	6	1	200	1600
M.5	(2,6-3,5)	03100060	12	7,2	8,3	12,2	6	1	200	1600
M.5	(0,7-1,6)	03100618	13,2	8,2	9,5	13,5	6	1	200	1600
M.5	(1,7-2,7)	03100626	13,2	8,2	9,5	13,5	6	1	200	1600
M.5	(2,7-3,5)	03100634	13,2	8,2	9,5	13,5	6	1	200	1600
M.6	(0,5-1,5)	03100079	12	7,2	8,3	12,2	6	1	200	1600
M.6	(1,6-2,5)	03100087	12	7,2	8,3	12,2	6	1	200	1600
M.6	(2,6-3,5)	03100095	12	7,2	8,3	12,2	6	1	200	1600
M.6	(0,7-1,6)	03100642	13,2	8,2	9,5	13,5	6	1	200	1600
M.6	(1,7-2,7)	03100650	13,2	8,2	9,5	13,5	6	1	200	1600
M.6	(2,7-3,5)	03100669	13,2	8,2	9,5	13,5	6	1	200	1600
M.6	(1,0-1,7)	03100677	16	10,6	12,3	16,6	7,8	1	200	1600
M.6	(1,8-3,2)	03100685	16	10,6	12,3	16,6	7,8	1	200	1600
M.6	(3,3-4,7)	03100693	16	10,6	12,3	16,6	7,8	1	200	1600
M.8	(1,0-1,7)	03100108	16	10,6	12,3	16,6	7,8	1	100	800
M.8	(1,8-3,2)	03100116	16	10,6	12,3	16,6	7,8	1	100	800
M.8	(3,3-4,7)	03100124	16	10,6	12,3	16,6	7,8	1	100	800
M.10	(1,0-1,7)	03100132	16	10,6	12,3	16,6	7,8	1	100	800
M.10	(1,8-3,2)	03100140	16	10,6	12,3	16,6	7,8	1	100	800
M.10	(3,3-4,7)	03100159	16	10,6	12,3	16,6	7,8	1	100	800

Mounting Holes

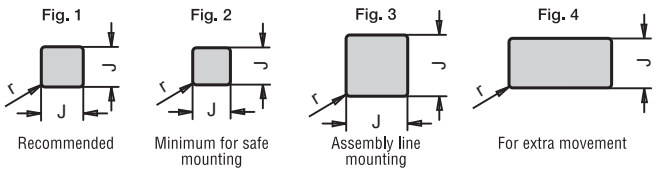

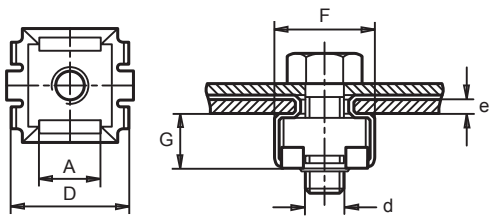

Material specifications:

CAGE: Stainless Steel 18/8

Surface treatment:

NUT: Steel Cr3 White zinc-plated

Front-mounted cage nut

Information

Cage nuts combine the classic elastic properties of fasteners used for assembly with the strength of multi-threaded steel nuts. Cage nuts are designed to be used in any kind of assembly including blind assemblies and are particularly common in equipment racks. They can be fastened within their housing using bolts and subjected to considerable tightening torque or axial forces. No special tools or specialized fitters are required to mount these nuts. The use of cage nuts allows for a great reduction in assembly time, as costly operations such as tapping, welding or riveting can be avoided. Due to the fact that the nuts are slightly loose within the cage, minor adjustments in the alignment of the parts to be assembled are possible.

Front-mounted cage nuts are particularly recommended for use with rigid structures with open or tubular frames and in blind assemblies. They can easily be slotted into the mounting hole and can then be moved within the housing using a simple aligning punch. They can also be removed immediately by reversing the process. The longer of the two tongues incorporates a small step which eliminates the gap between panels.

Front-mounted cage nut

For Metric bolt Nominal d	e	Part n° TF	A ±0,3	B ±0,5	C ±0,3	D ±0,3	E ±0,3	s	G ±0,3	Box quantity	Outer box quantity
M.4	(0,5-1,0)	03101012	7,6	19,5	13	5,9	11,2	0,5	12	200	1600
M.4	(1,0-1,5)	03101020	8,1	18,5	13	5,9	11,2	0,5	12	200	1600
M.4	(1,5-2,0)	03101039	8,6	17,5	13	5,9	11,2	0,5	12	200	1600
M.5	(0,5-1,0)	03101047	7,6	19,5	13	5,9	11,2	0,5	12	200	1600
M.5	(1,0-1,5)	03101055	8,1	18,5	13	5,9	11,2	0,5	12	200	1600
M.5	(1,5-2,0)	03101063	8,6	17,5	13	5,9	11,2	0,5	12	200	1600
M.6	(0,5-1,0)	03101071	7,6	19,5	13	5,9	11,2	0,5	12	200	1600
M.6	(1,0-1,5)	03101080	8,1	18,5	13	5,9	11,2	0,5	12	200	1600
M.6	(1,5-2,0)	03101098	8,6	17,5	13	5,9	11,2	0,5	12	200	1600
M.7	(0,6-1,1)	03101100	9,4	27,4	19	7,4	15,5	0,7	16,5	100	1600
M.7	(1,1-1,6)	03101119	9,4	26,4	19	7,4	15,5	0,7	16,5	100	1600
M.7	(1,6-2,1)	03101127	10,4	25,4	19	7,4	15,5	0,7	16,5	100	1600
M.8	(0,6-1,1)	03101135	9,4	27,4	19	7,4	15,5	0,7	16,5	100	1600
M.8	(1,1-1,6)	03101143	9,9	26,4	19	7,4	15,5	0,7	16,5	100	800
M.8	(1,6-2,1)	03101151	10,4	25,4	19	7,4	15,5	0,7	16,5	100	800

Mounting Holes

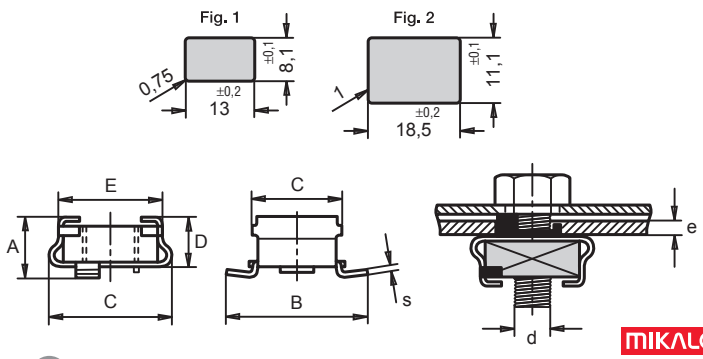

Material specifications:

Cage: Spring Steel
HRc 40÷47 (HV 390-470)

Surface treatment:

Anti-rust oil-dipped

Cylindrical cage nut

Information

Cage nuts combine the classic elastic properties of fasteners used for assembly with the strength of multi-threaded steel nuts. Cage nuts are designed to be used in any kind of assembly including blind assemblies and are particularly common in equipment racks. They can be fastened within their housing using bolts and subjected to considerable tightening torque or axial forces. No special tools or specialized fitters are required to mount these nuts. The use of cage nuts allows for a great reduction in assembly time, as costly operations such as tapping, welding or riveting can be avoided. Due to the fact that the nuts are slightly loose within the cage, minor adjustments in the alignment of the parts to be assembled are possible.

Cylindrical cage nuts are designed to be in assemblies where the only access is in the front of the panel. They are designed to be fitted on an assembly line into circular punched or drilled mounting holes. As the bolt is tightened the cylindrical mild steel walls of this nut expand until it fits tightly within the mounting hole. For this reason the cylindrical cage nut is not re-usable. It is recommended for use in panels with a wide range of different thicknesses.

Cylindrical cage nut

For Metric bolt d	Nominal e	Part nº Cylindrical cage nut	D ±0,5	B ±0,4	d_1 ±0,1	s	Box quantity	Outer box quantity
M.4	(0,7-4,0)	03100765	12,3	13	9,9	0,6	200	1600
M.5	(0,7-4,0)	03100773	12,3	13	9,9	0,6	200	1600
M.6	(0,7-4,0)	03100781	12,3	13	9,9	0,6	200	1600

Applications standard special

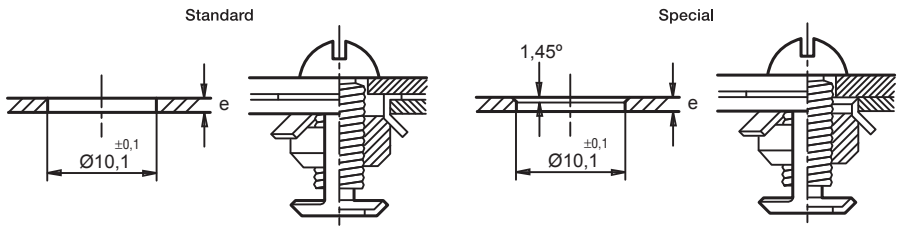

Surface treatment:
Cr3 white zinc-plated mild steel

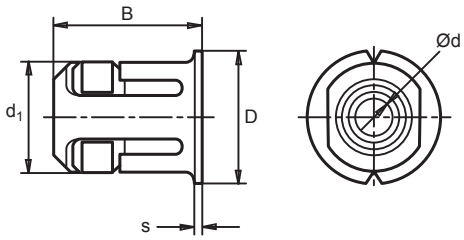

Clip cage nut

Information

Cage nuts combine the classic elastic properties of fasteners used for assembly with the strength of multi-threaded steel nuts. Cage nuts are designed to be used in any kind of assembly including blind assemblies and are particularly common in equipment racks. They can be fastened within their housing using bolts and subjected to considerable tightening torque or axial forces. No special tools or specialized fitters are required to mount these nuts. The use of cage nuts allows for a great reduction in assembly time, as costly operations such as tapping, welding or riveting can be avoided. Due to the fact that the nuts are slightly loose within the cage, minor adjustments in the alignment of the parts to be assembled are possible.

Clip cage nuts can slide easily along a panel edge whether is level or inclined. They can also be mounted within rectangular mounting holes in the middle of a panel. In smaller dimensions alignment and retention are ensured using a lip which fits into the mounting hole, allowing the nut to slide into the correct position and keeping it in place.

Clip cage nut

For metric bolt d	Nominal e	Part nº Clip	A ±0,5	B ±0,3	C ±0,3	E	D	F	s	x min.	y min.	Box quantity	Outer box quantity
○ M.4	(0,5-1,1)	03103018	15,8	11,7	6,4	7	7,3	7	0,6	12,5	10	500	4000
○ M.4	(1,2-1,8)	03103026	15,6	11,7	6,4	7	6,8	7	0,6	12,5	10	500	4000
○ M.4	(1,9-2,5)	03103034	15,5	11,7	6,4	7	6,4	7	0,6	12,5	10	500	4000
○ M.5	(0,5-1,1)	03103042	15,8	11,7	6,4	7	7,3	7	0,6	12,5	10	500	4000
○ M.5	(1,2-1,8)	03103050	15,6	11,7	6,4	7	6,8	7	0,6	12,5	10	500	4000
○ M.5	(1,9-2,5)	03103069	15,5	11,7	6,4	7	6,4	7	0,6	12,5	10	500	4000
○ M.6	(0,5-1,1)	03103077	15,8	11,7	6,4	7	7,3	7	0,6	12,5	10	500	4000
○ M.6	(1,2-1,8)	03103085	15,6	11,7	6,4	7	6,8	7	0,6	12,5	10	500	4000
○ M.6	(1,9-2,5)	03103093	15,5	11,7	6,4	7	6,4	7	0,6	12,5	10	500	4000
● M.6	(0,5-1,0)	03103106	23,3	14,9	7,8	7	12,7	8,5	0,8	16,1	14	500	1600
● M.6	(1,1-2,0)	03103114	23,3	14,9	7,8	7	12,7	8,5	0,8	16,1	14	500	1600
● M.6	(2,1-3,0)	03103122	23,3	14,9	7,8	7	12,7	8,5	0,8	16,1	14	500	1600
● M.7	(1,1-2,0)	03103130	23,5	15,3	8,3	8	12,7	8,5	1	16,1	14	200	1600
● M.7	(0,7-1,0)	03103149	23,5	15,3	8,3	8	12,7	8,5	1	16,1	14	200	1600
● M.7	(2,1-3,0)	03103157	23,5	15,3	8,3	8	12,7	8,5	1	16,1	14	200	1600
● M.8	(0,7-1,0)	03103165	23,5	15,3	8,3	9	12,7	8,5	1	16,1	14	100	800
● M.8	(1,1-2,0)	03103173	23,5	15,3	8,3	9	12,7	8,5	1	16,1	14	100	800
● M.8	(2,1-3,0)	03103181	23,5	15,3	8,3	9	12,7	8,5	1	16,1	14	100	800

Mounting Hole

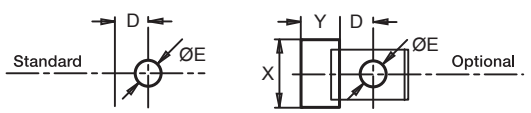

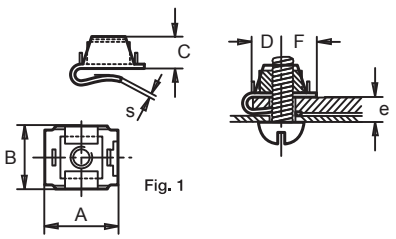

Fig. 1

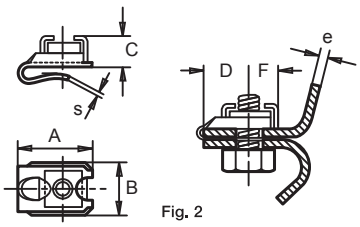

Fig. 2

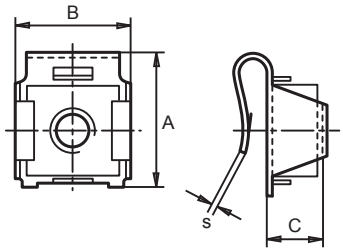

Material specifications:

Cage: Spring Steel
HRc 40÷47 (HV 390-470)
○ Strength class 6
● Strength class 8

Surface treatment:

Anti-rust oil-dipped

TNI Cage nut for leveling

Information

The cage nut for leveling offers a safe and vibration-resistant solution for the fixing of adjustable feet in the white goods and furniture industries and for general industrial applications.
These nuts can easily be push-mounted on the outer surface of the support or frame on an assembly line after painting or enameling has taken place. The pressure exerted by the wings of the cage help to keep the nut fixed in place.

TNI Cage nut for leveling

For Metric bolt d	Nominal e	Part nº TNI	a	b	c	G	F	Box quantity	Outer box quantity
M. 8	(0,8-1,6)	03104010	15,2	13	21	15,6	6,2	100	800
M. 8	(1,7-2,4)	03104029	15,2	13	21	15,6	6,2	100	800
M. 10	(0,8-1,6)	03104037	15,2	13	21	15,6	6,2	100	800
M. 10	(1,7-2,4)	03104045	15,2	13	21	15,6	6,2	100	800

Mounting Holes

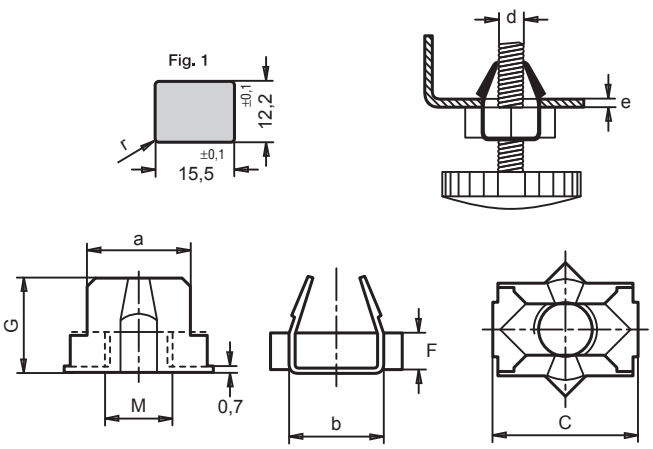

Material specifications:
Cage: Spring Steel
HRc 40÷47 (HV 390-470)

Surface treatment:
Nut: Steel anti-rust oil-dipped

TRS
Flat spring nut

Information

The Flat spring nut is a fastener composed of two raised thread forms which give double elastic pressure. The bow of the base and the arched form of the thread forms mean that two different forces are applied gradually to the screw when tightened. Radial force A is produced by the pressure of the thread forms deep into the thread while axial force B is exerted upon the outside of the thread due to the compression of the thread forms onto the base.

No special tools are required to mount this nut and it is quicker and easier to mount than conventional nuts. As it is self-locking, costly operations such as tapping, welding or riveting are avoided. It can also be used with fragile materials such as glass, plastic or enameled surfaces. In these cases the resilience of the nut avoids cracks or damage to the application area. This nut locks with tightening torques which much lower than for standard nuts due its great resilience.

TRS Flat spring nut

For Metric bolt	Din 7970	Article TRS	Part nº	a	b	s	Box quantity	Outer box quantity
M. 3		TRS 3	02120015	6 ±0,2	9	0,3	1000	16000
M. 4		TRS 4	02120031	8 ±0,2	14	0,4	1000	16000
M. 5		TRS 5	02120058	10 ±0,2	16	0,6	1000	16000
M. 6		TRS 6	02120066	12 ±0,3	18	0,5	1000	8000
M. 8		TRS 8	02120082	16 ±0,3	24	0,6	1000	8000
	2,9 (ISO-4)	TRS 2,9	02120103	8 ±0,2	14	0,5	1000	16000
	3,5 (ISO-6)	TRS 3,5	02120111	8 ±0,2	13	0,6	1000	16000
	3,9 (ISO-7)	TRS 3,9	02120120	10 ±0,2	14	0,6	1000	16000
	4,2 (ISO-8)	TRS 4,2	02120138	10 ±0,2	16	0,6	1000	16000
	4,8 (ISO-10)	TRS 4,8	02120146	12 ±0,3	16	0,7	1000	8000
	6,3 (ISO-14)	TRS 6,3	02120162	14 ±0,3	19	1	1000	8000

Material specifications:
Spring Steel
HRc 43÷49 (HV 425-495)

Surface treatment:
Anti-rust oil-dipped

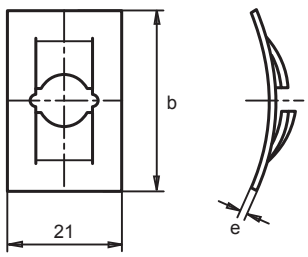

TR
U-nut for DIN 7970 threaded bolts

Information

The TR U-nut is a fastener composed of two flaps in clip form with two external raised thread forms. The design of this nut means that a double elastic force is exerted when tightened. This nut can be held in place manually when tightening. No special tools are required to mount U-nuts, and they can be assembled much more quickly and easily than conventional nuts. The self-locking feature means that costly operations such as tapping, welding or riveting can be avoided. It can also be used with fragile materials such as glass, plastic or enameled surfaces. In these cases the resilience of the nut avoids cracks or damage to the application area.

This nut locks with tightening torques much lower than for standard nuts due its great resilience. It is normally mounted on the edge of a panel but it can also be used in a rectangular mounting hole in the middle of a panel. Thanks to the extremely wide range of Mikalor U-nuts, designers can chose amongst an infinite number of different dimensions, panel thicknesses and screw sizes. The fact that the U-nut allows slight adjustment within the mounting hole ensures correct alignment of the panels.

TR U-nut for DIN 7970 threaded bolts

"U" Nut Article	Part nº TR-U	Fig.	Ø Din 7970	e	a	b
TR 3201-A	02130748	3	2,9 (ISO-4)	0,6-1,2	9 ±0,2	16 ±0,3
TR 1812-B	02130553	1	2,9 (ISO-4)	0,7-1,2	8 ±0,2	11 ±0,3
(*) TR 825-B	02128252	1	2,9 (ISO-4)	2,0-3,0	8 ±0,2	12 ±0,3
TR 522-1C	02130203	1	3,5 (ISO-6)	0,7-1,0	9 ±0,2	12 ±0,3
TR 522-2C	02130220	1	3,5 (ISO-6)	1,1-1,5	9 ±0,2	12 ±0,3
TR 522-3C	02130246	1	3,5 (ISO-6)	1,6-2,0	9 ±0,2	12 ±0,3
TR 522-4C	02130262	1	3,5 (ISO-6)	2,1-2,5	9 ±0,2	11,5 ±0,3
TR 531-1C	02130289	1	3,9 (ISO-7)	0,7-1,0	9 ±0,2	12 ±0,3
TR 531-2C	02130300	1	3,9 (ISO-7)	1,1-1,5	9 ±0,2	12 ±0,3
TR 2223-D	02130588	1	4,2 (ISO-8)	0,6-0,8	16 ±0,2	11,7 ±0,3
TR 515-1B	02130537	1	4,2 (ISO-8)	0,6-1,1	9 ±0,2	10,5 ±0,3
TR 523-1C	02130326	1	4,2 (ISO-8)	0,7-1,0	9 ±0,2	12 ±0,3
TR 536-B	02130625	1	4,2 (ISO-8)	0,7-1,6	11 ±0,2	17,6 ±0,3
● TR 502-A	02128164	1	4,2 (ISO-8)	0,8-1,5	9 ±0,2	19 ±0,3
TR 523-2C	02130342	1	4,2 (ISO-8)	1,1-1,5	9 ±0,2	12 ±0,3
TR 515-2B	02130650	1	4,2 (ISO-8)	1,4-1,6	9 ±0,2	10,5 ±0,3
TR 523-3C	02130369	1	4,2 (ISO-8)	1,6-2,0	9 ±0,2	12 ±0,3
TR 2202-3D	02130529	1	4,2 (ISO-8)	1,7-2,2	16 ±0,2	15,5 ±0,3
▲ TR 2202-3D	02127057	1	4,2 (ISO-8)	1,7-2,2	16 ±0,2	15,5 ±0,3
TR 523-4C	02130385	1	4,2 (ISO-8)	2,1-2,5	9 ±0,2	11,5 ±0,3
▲ TR 523-4C	02127030	1	4,2 (ISO-8)	2,1-2,5	9 ±0,2	11,5 ±0,3
TR 2448-B	02130510	2	4,2 (ISO-8)	3,5-4,8	11 ±0,2	16 ±0,3
TR 506-1B	02130465	1	4,8 (ISO-10)	0,6-1,0	12 ±0,2	21 ±0,3
TR 2207-1B	02130406	1	4,8 (ISO-10)	0,9-1,4	12 ±0,2	15 ±0,3
TR 506-2B	02130481	1	4,8 (ISO-10)	1,1-2,5	12 ±0,2	21 ±0,3
TR 2207-2B	02130422	1	4,8 (ISO-10)	1,5-2,4	12 ±0,2	15 ±0,3
▲ TR 709-B	02127090	2	4,8 (ISO-10)	1,5-2,5	11 ±0,2	12,8 ±0,3
TR 606-B	02130852	2	4,8 (ISO-10)	1,5-3,0	12 ±0,2	21 ±0,3
TR 2207-3B	02130449	1	4,8 (ISO-10)	2,5-3,2	12 ±0,2	15 ±0,3
TR 506-3B	02130502	1	4,8 (ISO-10)	2,6-3,8	12 ±0,2	21 ±0,3
TR 2225-1D	02130609	1	5,5 (ISO-12)	0,4-0,9	16 ±0,2	16,5 ±0,3
TR 2222-D	02130570	2	5,5 (ISO-12)	0,8-1,5	16 ±0,2	14,7 ±0,3
TR 2225-3D	02130617	1	5,5 (ISO-12)	1,6-2,1	16 ±0,2	16 ±0,3

Fig. 1

Fig. 2

Fig. 3

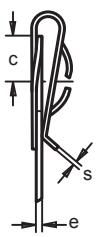

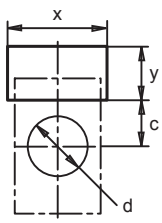

TR U-nut for DIN 7970 threaded bolts

s	d	c	x min.	y min.	Box quantity	Outer box quantity
0,4	6 ±0,2	8,5 ±0,3	9,5	8,5	1000	16000
0,5	5 ±0,2	4,5 ±0,3	8,5	6	1000	16000
0,5	4,7 ±0,2	5 ±0,3	8,5	8	1000	5000
0,6	5 ±0,2	6,5 ±0,3	9,5	7	1000	8000
0,6	5 ±0,2	6 ±0,3	9,5	7	1000	8000
0,6	5 ±0,2	6 ±0,3	9,5	7	1000	8000
0,6	5 ±0,2	5 ±0,3	9,5	7,5	1000	8000
0,6	6 ±0,2	6,5 ±0,3	9,5	7	1000	8000
0,6	6 ±0,2	6 ±0,3	9,5	7	1000	8000
0,6	6,5 ±0,2	5 ±0,3	16,5	7	1000	8000
0,6	6 ±0,2	5,3 ±0,3	9,5	6	1000	8000
0,6	6 ±0,2	6,5 ±0,3	9,5	7	1000	8000
0,6	7 ±0,2	8 ±0,3	11,5	8,5	1000	8000
0,6	7 ±0,2	12 ±0,3	9,5	12	1000	8000
0,6	6 ±0,2	6 ±0,3	9,5	7	1000	8000
0,6	6 ±0,2	4,5 ±0,3	9,5	6	1000	8000
0,6	6 ±0,2	6 ±0,3	9,5	7	1000	8000
0,6	6 ±0,2	6 ±0,3	16,5	8,5	1000	8000
0,6	6 ±0,2	5 ±0,3	9,5	7,5	1000	8000
0,6	6 ±0,2	6,5 ±0,3	11,5	8,5	1000	8000
0,6	7 ±0,2	6,5 ±0,3	11,5	8	1000	8000
0,7	7 ±0,2	9,5 ±0,3	12,5	12	1000	4000
0,7	7 ±0,2	6,5 ±0,3	12,5	10	1000	8000
0,7	7 ±0,2	9 ±0,3	12,5	12	1000	4000
0,7	7 ±0,2	6 ±0,3	12,5	10	1000	8000
0,7	6 ±0,2	9 ±0,3	12,5	12	1000	8000
0,7	7 ±0,2	5,5 ±0,3	12,5	10	1000	8000
0,7	7 ±0,2	8 ±0,3	12,5	12	1000	4000
0,8	7 ±0,2	9 ±0,3	16,5	9	1000	4000
0,8	6,5 ±0,2	6,5 ±0,3	16,5	9	1000	4000
0,8	7 ±0,2	8 ±0,3	16,5	9	1000	4000

Material specifications:
Spring Steel
HRc 43÷45 (HV 420-500)

Surface treatment:
Anti-rust oil-dipped
(*) Geomet
● CR3 White Zinc-Plated
▲ Stainless steel

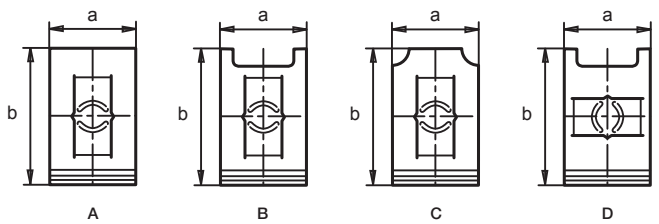

TR
U-nut for metric threaded bolts

Information

The TR U-nut is a fastener composed of two flaps in clip form with two external raised thread forms. The design of this nut means that a double elastic force is exerted when tightened. This nut can be held in place manually when tightening. No special tools are required to mount U-nuts, and they can be assembled much more quickly and easily than conventional nuts. The self-locking feature means that costly operations such as tapping, welding or riveting can be avoided. It can also be used with fragile materials such as glass, plastic or enameled surfaces. In these cases the resilience of the nut avoids cracks or damage to the application area.

This nut locks with tightening torques much lower than for standard nuts due its great resilience. It is normally mounted on the edge of a panel but it can also be used in a rectangular mounting hole in the middle of a panel. Thanks to the extremely wide range of Mikalor U-nuts, designers can chose amongst an infinite number of different dimensions, panel thicknesses and screw sizes. The fact that the U-nut allows slight adjustment within the mounting hole ensures correct alignment of the panels.

TR U-nut for metric threaded bolts

U-Nut article	Part nº TR-U	Fig.	Ø ACME	e	a	b
TR 2302-1D	02130641	1	1/4"	0,6-1,1	18 ±0,2	16,4 ±0,3
TR 1301-A	02130756	1	1/4"	0,7-1,4	14 ±0,2	30 ±0,3
TR 2302-2D	02130633	1	1/4"	1,2-1,8	18 ±0,2	16,3 ±0,3
TR 2301-2A	02130596	1	1/4"	1,5-2,3	14 ±0,2	30,5 ±0,3
			Nominal diameter			
TR 503-A	02130019	1	M.3	0,8-1,6	8 ±0,2	12 ±0,3
TR 601-A	02130545	2	M.4	0,6-2,5	10 ±0,2	16 ±0,3
▲ TR 601-A	02127110	2	M.4	0,6-2,5	10 ±0,2	16 ±0,3
TR 501-A	02130027	1	M.4	1,0-2,0	10 ±0,2	18 ±0,3
TR 520-A	02130035	1	M.4	3,0-4,0	10 ±0,2	17,5 ±0,3
TR 2212-1C	02130051	1	M.5	0,6-1,1	12 ±0,2	15 ±0,3
TR 521-1B	02130115	1	M.5	0,6-1,4	12 ±0,2	21 ±0,3
TR 509-1B	02130158	1	M.5	0,6-1,4	12 ±0,2	24 ±0,3
TR 2212-2C	02130078	1	M.5	1,2-1,8	12 ±0,2	15 ±0,3
TR 521-2B	02130131	1	M.5	1,5-2,6	12 ±0,2	21 ±0,3
TR 509-2B	02130174	1	M.5	1,5-2,6	12 ±0,2	24 ±0,3
TR 2212-3C	02130094	1	M.5	1,9-2,2	12 ±0,2	15 ±0,3
TR 2212-4C	02128076	1	M.5	2,3-3,0	12 ±0,2	14,7 ±0,3
TR 2219-2D	02130684	1	M.6	1,0-1,8	16 ±0,2	16,5 ±0,3
TR 2219-3D	02130668	1	M.6	1,9-3,0	16 ±0,2	16,2 ±0,3
TR 506-A	02130182	1	M.6	2,0-3,2	16 ±0,2	24,5 ±0,3
TR 516-A	02130879	1	M.6	3,3-4,6	16 ±0,2	24,5 ±0,3

Fig. 1

Fig. 2

Fig. 3

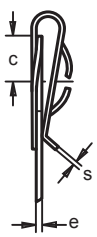

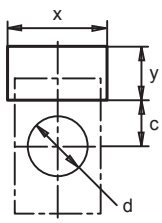

TR U-nut for metric threaded bolts

s	d	c	x min.	y min.	Box quantity	Outer box quantity
0,9	8,5 ±0,2	7,5 ±0,3	18,5	8	1000	4000
0,8	9 ±0,2	16,5 ±0,3	14,5	10	1000	4000
0,9	8,5 ±0,2	7 ±0,3	18,5	8	1000	4000
1	9 ±0,2	16,5 ±0,3	14,5	12	1000	4000
			Nominal diameter			
0,3	5 ±0,2	6 ±0,3	8,5	6,5	1000	16000
0,4	5 ±0,2	7 ±0,3	10,5	8,5	1000	8000
0,4	6 ±0,2	8,5 ±0,3	10,5	8,5	1000	8000
0,4	6 ±0,2	7 ±0,3	10,5	8,5	1000	8000
0,5	7 ±0,2	6,5 ±0,3	12,5	8	1000	8000
0,5	7 ±0,2	9,5 ±0,3	12,5	10	1000	8000
0,5	7 ±0,2	12,5 ±0,3	12,5	10,7	1000	8000
0,5	7 ±0,2	6,5 ±0,3	12,5	8	1000	8000
0,5	7 ±0,2	9 ±0,3	12,5	10	1000	8000
0,5	7 ±0,2	12 ±0,3	12,5	10,7	1000	8000
0,5	7 ±0,2	6 ±0,3	12,5	8	1000	8000
0,5	7 ±0,2	5,5 ±0,3	12,5	8	1000	8000
0,5	8 ±0,2	8,4 ±0,3	16,5	8	1000	8000
0,5	8 ±0,2	7,4 ±0,3	16,5	8	1000	4000
0,5	8 ±0,2	10 ±0,3	14,5	10,7	1000	4000
0,5	8 ±0,2	9 ±0,3	14,5	10,7	1000	8000

Material specifications:
Spring Steel
HrC 43÷49 (HV 420-500)

Surface treatment:
Anti-rust oil-dipped
▲ Stainless steel

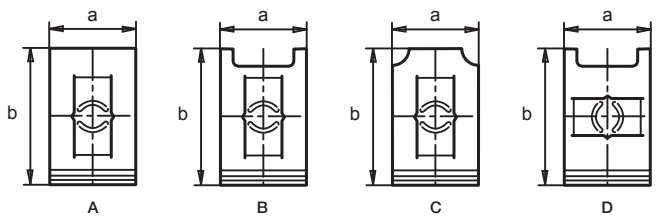

TRU
Universal speed nut

Information

The TRU Universal speed nut is a fastener composed of two flaps in clip form with an external raised thread form. The design of this nut means that a double elastic force is exerted when tightened. The upper flap has a longitudinal slit on either side forming struts which increase the grip of the nut onto the panel. This nut is designed to be used with DIN 7970 bolts or bolts with an ACME thread depending on the model chosen.

TRU locks with tightening torques much lower than for standard nuts due its great resilience. The wide range available means that designers can chose amongst an infinite number of different dimensions, panel thicknesses and screw sizes.

No special tools are required to mount U-nuts, and they can be assembled much more quickly and easily than conventional nuts and costly operations such as tapping, welding or riveting can be avoided. They are normally mounted on the edge of a panel but can also be used in a rectangular mounting hole in the middle of a panel. The fact that the U-nut allows slight adjustment within the mounting hole ensures correct alignment of the panels.

TRU Universal speed nut

Article	Part nº TRU	Ø Din 7970	e	a	b	s	d	c	x min.	y min.
TRU 2876	02128766	3,5(ISO-6)	3,0-3,4	9,6 ±0,5	12,7 ±0,5	0,6	6 ±0,2	7 ±0,3	11	-
TRU 2849	02128498	4,2 (ISO-8)	0,5-4,0	14 ±0,5	25 ±0,5	0,6	5,5 ±0,2	14 ±0,3	15	-
TRU 2817	02128172	4,2 (ISO-8)	0,5-4,0	11 ±0,5	18,5 ±0,5	0,6	7 ±0,2	10 ±0,3	12	8,2
TRU 2801	02128017	4,2 (ISO-8)	0,5-4,0	14 ±0,5	19 ±0,5	0,6	7 ±0,2	8 ±0,3	15	-
TRU 2809	02128092	4,2 (ISO-8)	0,5-4,0	14,5 ±0,5	15 ±0,5	0,6	7 ±0,2	6,5 ±0,3	15,5	-
TRU 2822	02128228	4,2 (ISO-8)	0,5-2,5	9,5 ±0,5	12,3 ±0,5	0,6	6,5 ±0,2	6,5 ±0,3	10,5	8,2
TRU 2838	02128383	4,2 (ISO-8)	0,7-3,5	9,5 ±0,5	12,3 ±0,5	0,6	5,5 ±0,2	6,5 ±0,3	10,5	8,2
TRU 2832	02128324	4,2 (ISO-8)	2,5-3,0	9,5 ±0,5	12,3 ±0,5	0,6	5,5 ±0,2	6,5 ±0,3	10,5	8,2
TRU 2840	02128404	4,2 (ISO-8)	2,5-3,2	11 ±0,5	18,6 ±0,5	0,6	7,2 ±0,2	10,5 ±0,3	12	8,2
TRU 2870	02128700	4,8 (ISO-10)	0,5-4,0	15 ±0,5	21 ±0,5	0,6	6 ±0,2	10,5 ±0,3	16	-
TRU 3082	02130828	4,8 (ISO-10)	0,6-4,0	16 ±0,5	20 ±0,5	0,6	8,5 ±0,2	8,5 ±0,3	17	-
TRU 2813	02128130	4,8 (ISO-10)	2,5-4,5	15 ±0,5	19,8 ±0,5	0,7	7 ±0,2	10,5 ±0,3	16	-
TRU 2869	02128699	4,8 (ISO-10)	3,0-4,3	15 ±0,5	21 ±0,5	0,6	6 ±0,2	10,5 ±0,3	16	-
TRU 2853	02128535	4,8 (ISO-10)	3,2-4,8	15 ±0,5	20 ±0,5	0,6	7 ±0,2	10,5 ±0,3	16	-
		Ø ACME								
TRU 3090	02130908	1/4"(Ø6,3)*	0,5-4,0	16 ±0,5	19 ±0,5	0,9	9,5 ±0,2	8 ±0,3	17	12,2
TRU 2808	02128084	1/4"(Ø6,3)*	0,5-4,0	16,2 ±0,5	30,5 ±0,5	0,9	9,5 ±0,2	21,5 ±0,3	17,5	-
TRU 2806	02128068	1/4"(Ø6,3)*	0,6-4,0	17 ±0,5	23 ±0,5	0,9	9,5 ±0,2	9,5 ±0,3	18	12
TRU 2802	02128025	1/4"(Ø6,3)*	0,7-4,0	15,5 ±0,5	22,9 ±0,5	0,9	9,5 ±0,2	9,5 ±0,3	16,5	-
TRU 2875	02128755	1/4"(Ø6,3)*	2,0-3,0	16,2 ±0,5	19 ±0,5	0,9	9,7 ±0,2	8 ±0,3	19	12,2
TRU 2826	02128260	1/4"(Ø6,3)*	4,0-7,0	16,2 ±0,5	28,5 ±0,5	0,9	9,7 ±0,2	19 ±0,3	17,5	-
TRU 2812	02128122	1/4"(Ø6,3)*	4,0-7,0	16,2 ±0,5	32 ±0,5	0,9	9,7 ±0,2	21,5 ±0,3	17,5	-

Material specifications:

Spring Steel
HRc 40÷48 (HV 390-485)

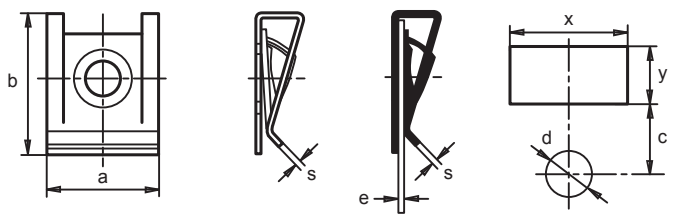

TRE
Special speed nut

Information

The TRE nut is a hexagonal steel nut with a circular rim. Form A is used to assemble panels using DIN 7970 bolts and Form B using rivets.

TRE Special speed nut

Article	Part nº TRE	Fig.	a	b	b	s	d	Ø
TRE 3-13	02121018	A	5	13,5	8	0,5	2,6	3
TRE 5-14	02121088	A	5,4	14,5	9	0,5	4,5	5
TRE 5-15	02121069	A	5,8	15	11	0,6	4,5	5
TRE 6-15	02121199	A	5,8	15	11	0,6	5,5	6
TRE 8-16	02121166	A	7,8	20	13	0,6	7,3	8
TRE 5-14	02121077	B	5,7	14,5	10	0,5	4,3	M.5
TRE 5-16	02121044	B	6,5	16	11	0,6	3,9	5

Material specifications:
Spring Steel
HRc 40÷48 (HV 390-485)

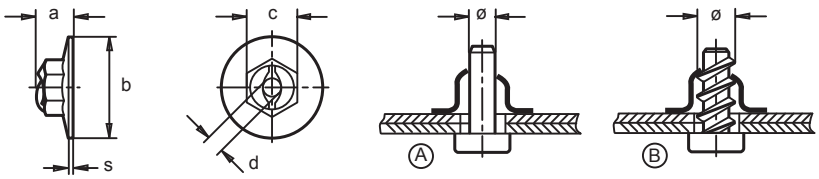

TRT-T Chimney (Lug) nut

Information

The TRT chimney nut is a fastener composed of two flaps in clip form. The design of this nut means that a double elastic force is exerted when tightened. In the middle of the upper flap there is a hollow cylinder or “chimney” with multiple threads which when given the correct torque guarantees maximum fastening and assembly strength. The lower flap incorporates a third flap which is set in the opposite direction to the outer flaps in order to ensure optimum grip on the panel.

Depending on the assembly two types of thread are available: normal or self-locking. No special tools are required to mount chimney nuts, and they can be assembled much more quickly and easily than conventional nuts and costly operations such as tapping, welding or riveting can be avoided. They are normally mounted on the edge of a panel but can also be used in a rectangular mounting hole in the middle of a panel. The use of this nut allows slight adjustment within the mounting hole thereby ensuring correct alignment of the panels.

TRT-T Chimney (Lug) nut

Article	Part n° TRT-T	Type	e	a	a1	b	f	s	c	d	Box quantity	Outer box quantity
TRT-M6-23-4	02129028	A	0,8-4,0	12,5	14,5	24,4	14,4	0,9	12,0	10,0	5000	5000
TRT-M6X-23-4	02129036	B	0,8-4,0	12,5	14,5	24,4	14,4	0,9	12,0	10,0	5000	5000
TRT-M6-29-4	02129124	A	0,8-4,0	12,5	14,5	30,4	20,4	0,9	18,0	10,0	5000	5000
TRT-M6X-29-4	02129010	B	0,8-4,0	12,5	14,5	30,4	20,4	0,9	18,0	10,0	5000	5000
TRT-M8-25-4	02129140	A	0,8-4,0	12,5	17,0	26,0	15,5	1,0	13,0	11,5	5000	5000
TRT-M8X-25-4	02128674	B	0,8-4,0	12,5	17,0	26,0	15,5	1,0	13,0	11,5	5000	5000

Material specifications:

Spring Steel
HRc 40÷51 (HV 390÷520)
Normal Thread (A)
Self-Locking Thread (B)

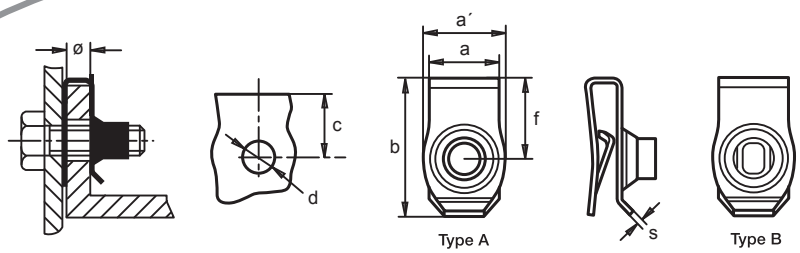

TRT Chimney (Lug) nut

Information

The TRT chimney nut is a fastener composed of two flaps in clip form. The design of this nut means that a double elastic force is exerted when tightened. The upper flap has a longitudinal slit on either side forming struts which increase the grip of the nut onto the panel.

In the middle of the upper flap there is a hollow cylinder or "chimney" with multiple threads which when given the correct torque guarantees maximum fastening and assembly strength.

No special tools are required to mount chimney nuts, and they can be assembled much more quickly and easily than conventional nuts and costly operations such as tapping, welding or riveting can be avoided. They are normally mounted on the edge of a panel but can also be used in a rectangular mounting hole in the middle of a panel. The use of this nut allows slight adjustment within the mounting hole thereby ensuring correct alignment of the panels.

TRT Chimney (Lug) nut

Article Universal	Part nº	Surface Treatment	x min.	y min.	e	a	b	f	s	d	c	Box quantity	Outer box quantity
TRT-M5-1	02128316	Anti-rust Oil Dipped	-	-	0,5-4	12	14,8	8	0,6	6,2	7	5000	5000
TRT-M5-1	62128315	Geomet	-	-	0,5-4	12	14,8	8	0,6	6,2	7	5000	5000
TRT-M5-2	02128623	Geomet	-	-	0,5-4	14	19,6	10,6	0,6	6,2	9,4	5000	5000
TRT-M5-3	02128770	zinc-plated + Nickel	16	10	0,5-4	14,5	22	12,2	0,6	7,7	10	1500	1500
TRT-M6-1	02128279	Anti-rust Oil Dipped	17	15	0,5-4	15	22	12,2	0,75	9,2	11	4000	4000
TRT-M6-1	62128278	Geomet	17	15	0,5-4	15	22	12,2	0,75	9,2	11	4000	4000
TRT-M6-2	02128615	White zinc-plated	-	-	0,7-4	16	23,8	12,75	0,85	9	11,5	2500	2500
TRT-M6-2	62128614	Geomet	-	-	0,7-4	16	23,8	12,75	0,85	9	11,5	2500	2500
TRT-M8-1	02128295	Anti-rust Oil Dipped	18	16	0,5-4	16,6	24,3	14,5	1	11,2	13	2000	2000
TRT-M8-1	92128299	White zinc-plated	18	16	0,5-4	16,6	24,3	14,5	1	11.2	13	2000	2000

Material specifications:
Spring Steel
HRc 40÷51 (HV 390-520)

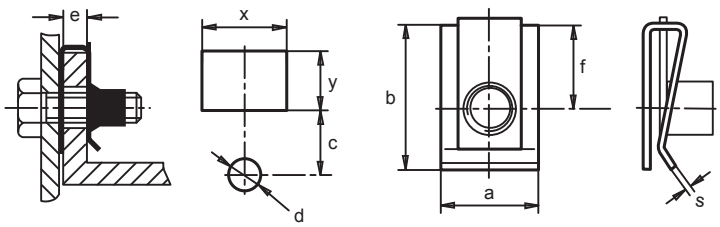

TCL Special cage nut

Information

The TCL Special Cage nut is a fastener composed of two flaps in clip form. A multi-thread square nut is set into the centre of the upper flap which when given the correct torque can give maximum fastening and assembly strength.

No special tools are required to mount these nuts, and they can be assembled much more quickly and easily than conventional nuts and costly operations such as tapping, welding or riveting can be avoided. They are normally mounted on the edge of a panel but can also be used in a rectangular mounting hole in the middle of a panel. The use of this nut allows slight adjustment within the mounting hole thereby ensuring correct alignment of the panels.

TCL Special cage nut

For Metric bolt	Part nº TLC	e	A ±0,3	B ±0,3	C max.	Ø ±0,2	Box quantity	Outer box quantity
TCL M-6	03103560	0,6-1,5	18	26,6	14,5	6,5	2000	2000
TCL M-6	03103659	1,0-1,4	18	24,2	10	7	2000	2000
TCL M-6	03103667	0,5-1,5	16,5	28,7	15,5	9	2000	2000
TCL M-6	03103624	3,5-4,5	18	24,3	11,5	13	1500	1500
TCL M-6	03103632	3,5-4,5	19	24,3	11,5	13	1500	1500
TCL M-8	03103587	0,8-2,0	19	24,7	13,2	11	1500	1500
TCL M-8	03103544	1,2-1,6	19	25	12,7	8,5	1500	1500

Material specifications:
Cage: Spring Steel
HRc40÷47 (HV 390÷470)
Nut: Steel

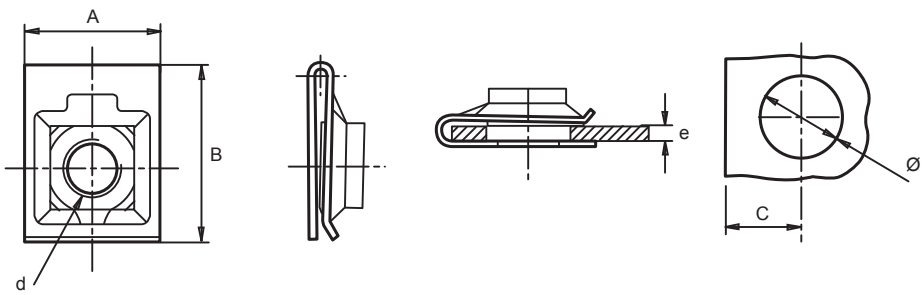

TRO
Expansion speed nut

Information

The TRO Expansion speed nut is a self-locking nut which is both very safe and very resistant to vibration. It was designed specifically for blind assemblies which are only accessible from one side and can be mounted in the centre or around the edge of a panel.
It is also widely used in the assembly of rigid structures with open or tubular frames. It can be front-mounted easily with a little pressure and thanks to a slight step built into the body of the nut the distance between panels is avoided.

TRO Expansion speed nut

Article	Part nº TRO	Fig.	a	b	c	d	s	f	L	K	±0,1 H	±0,1 J	e	Ø Din 7970	Box quantity	Outer box quantity
TRO-1742	02133017	A	14,5	7	10	13,5	0,7	9	2,5	0,75	12,6-13,1	8,8	0,8-1,2-1,2-1,6	4,8 (ISO-10)	1000	8000
TRO-1877	02133025	B	11,1	7,5	5,16	8,8	0,5	5,69	1	-	8,3	8,8	0,6-1,0	3,5 (ISO-6)	1000	8000
TRO-2846	02133033	B	13,5	9,5	6,3	10,8	0,6	7,1	1	-	10,2	-	0,6-1,0	4,2 (ISO-8)	1000	8000

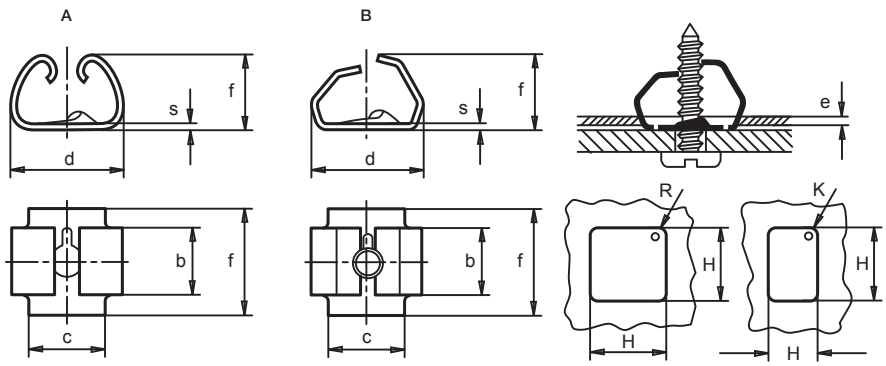

Material specifications:
Spring Steel
HV 40÷47 (HV 390-470)

Surface treatment:
Anti-rust Oil-dipped

MIKALOR

SPECIAL FASTENERS

SRM
Circular uncapped push-on fastener for shafts

Information

The SRM push on fastener is a one-use fastener designed for use in assemblies which are not normally dismounted, as in order to do this it would be necessary to break the SRM.
It is normally fitted to shafts with no groove but it can also be used with grooved shafts, which would help to improve its resistance to axial forces.
It is used in applications which do not require great force such as electrical devices, electricity, gas or water meters, measuring instruments, etc.

SRM Circular uncapped push-on fastener for shafts

Article	Part nº SRM	a	s	d_1	h	Box quantity	Outer box quantity
SRM 2	02110370	7	0,2	2	0,7	1000	64000
SRM 3	02110257	7,3	0,3	3	0,8	1000	64000
SRM 4	02110388	10	0,3	4	0,8	1000	16000
SRM 5	02110396	11	0,3	5	0,9	1000	16000
SRM 6	02110409	13	0,3	6	1	1000	16000
SRM 7	02110417	14	0,3	7	1	1000	16000
SRM 8	02110425	16	0,3	8	1,2	1000	16000
SRM 9	02110433	17	0,3	9	1,4	1000	16000
SRM 10	02110281	16	0,3	10	1,4	1000	16000
SRM 12	02110441	22	0,4	12	1,4	500	8000
SRM 14	02110450	24	0,4	14	1,4	500	8000

*** For dimensions greater than M14, please consult for details on availability.**

Material specifications:
Spring Steel
HRc 40÷47 (HV 390-470)

Surface treatment:
White zinc-plated

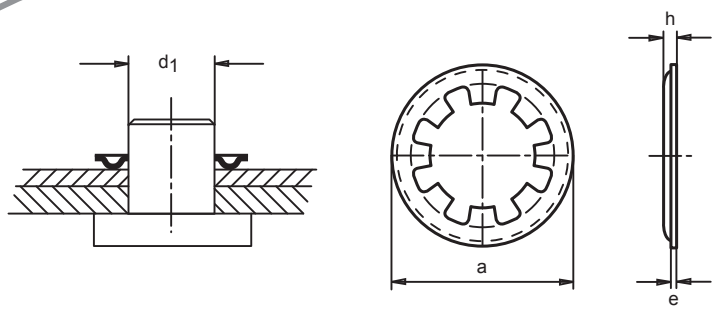

SRC Circular push-on fastener

Information

The SRC circular push on fastener is a one-use fastener designed for use in assemblies which are not normally dismounted, as in order to do this it would be necessary to break the SRC.
It is used in applications which do not require great force such as electrical devices, electricity, gas or water meters, measuring instruments, etc.

SRC Circular push-on fastener

Article	Part nº SRC	a	d_1	e	Box quantity	Outer box quantity
SRC 4,8	02110345	14,2	4,8	0,4	1000	16000

* For special diameters or sizes, please consult for details on availability.

Material specifications:
Spring Steel
HRc 40÷48

Surface treatment:
Anti-rust Oil-dipped

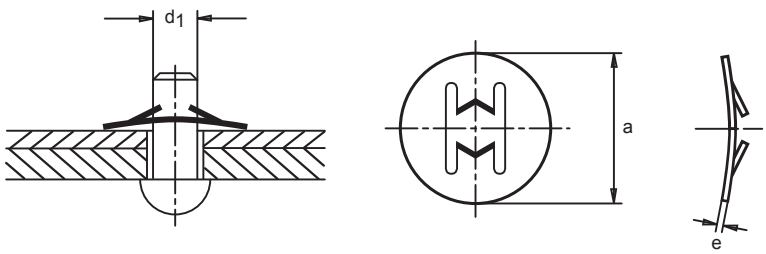

SRR Flat nut for shafts

Information

The SRR Flat nut is a rectangular fastener with the entry orifice of the shaft situated in the middle. It is a one-use fastening element designed for use in assemblies which are not normally dismounted, as in order to do this it would be necessary to break the SRR.
It is used in applications which do not require great force such as electrical devices, electricity, gas or water meters, measuring instruments, etc.

SRR Flat nut

Article	Part nº SRR	d1	a	b	s	Box quantity	Outer box quantity
SRR 1,5	02110020	1,5	8	15	0,3	1000	16000
SRR 2	02110038	2	8	15	0,3	1000	16000
SRR 2,5	02110046	2,5	8	15	0,3	1000	16000
SRR 3	02110054	3	8	15	0,3	1000	16000
SRR 3,5	02110062	3,5	8	15	0,3	1000	16000
SRR 4	02110070	4	10	18	0,4	1000	16000
SRR 5	02110097	5	10	18	0,4	1000	16000
SRR 6	02110118	6	12	18	0,4	1000	8000
SRR 8	02110150	8	16	24	0,5	1000	8000

Material specifications:
Spring Steel
HRc 43÷49 (HV425-495)

Surface treatment:
Anti-rust Oil-dipped

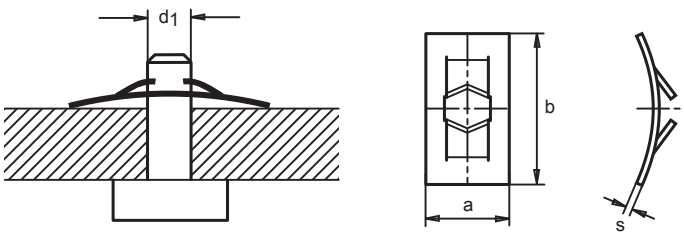

CL
Shaft clip

Information

The CL shaft clip is particularly useful for use with small diameter shafts as it can handle quite considerable axial forces.
The design of the inside edge allows the CL clip to reach the very bottom of the groove, meaning that unnecessary wear and tear caused by movement due to a poor fit can be avoided.
The frontal flap forms a convenient grip which makes CL much easier to mount than other more conventional shaft clips.

CL Shaft clip

Article	Part nº CL	a	b	c	s	d1	d2	m	Box quantity	Outer box quantity
CL 5	02280821	10,6	11,2	3,7	0,5	5	6	0,74	1000	16000
CL 6	02280354	11,5	11,8	4,5	0,5	6	7	0,94	1000	8000
CL 8	02280688	15	15,5	4	0,6	7	8	0,74	1000	8000
(*) CL 10	02280784	16	15,7	4,5	0,6	8	9	1,04	1000	8000

Material specifications:
Spring Steel
HRc. 45÷50

Surface treatment:
Mechanical zinc-plated
(*) Phosphated

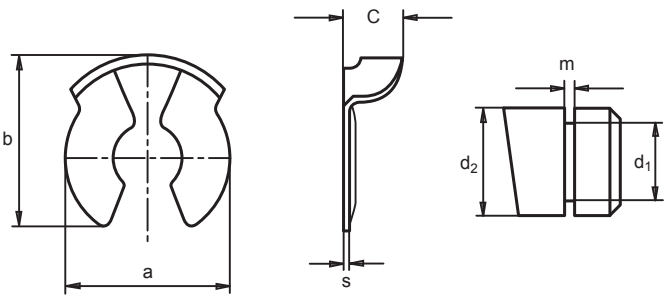

SCB Compression ring

Information

The SCB compression Ring is a cylindrical band which has a lateral cut in the form of a tooth. This form allows the ring to be mounted on the shaft and to produce the necessary compression to avoid any radial movement between the components which have been fastened together. This ring is especially useful for fixing buttons and knobs in electronic and white goods applications.

SCB Compression ring

Article	Part nº SCB	d Ø Application	a	b	s	Box quantity	Outer box quantity
SCB 1794	02241010	6,4	5,9	4	0,5	1000	16000
SCB 1921	02241029	7,1	6,5	6	0,5	1000	16000
SCB 1939	02241037	8	7,3	6	0,5	1000	8000
SCB 1963	02241045	8,3	7,7	6	0,5	1000	8000
SCB 4220	02241109	9	8,5	4	0,5	1000	16000
SCB 1609	02241053	9,5	9,1	6	0,6	1000	8000
SCB 1853	02241061	10,3	9,7	6	0,6	1000	8000
SCB 1853E	02241141	10,5	9,8	6	0,4	1000	8000
SCB 1828	02241070	11,1	10,5	6	0,6	1000	8000
SCB 1937	02241088	12,7	11,6	6	0,6	1000	8000
SCB 2125	02241096	14,2	12,6	6	0,6	1000	8000

Standard knob application

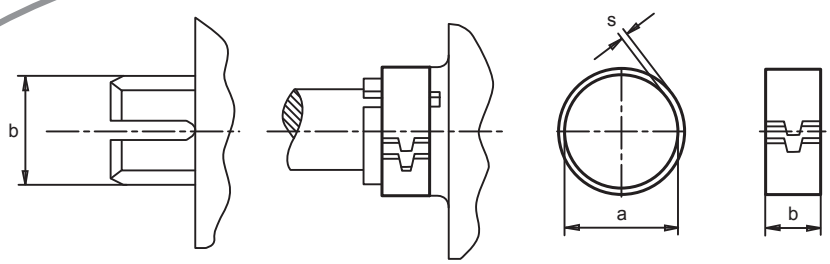

Material specifications:
Spring Steel
HRc 43÷49 (HV425-495)

Surface treatment:
Anti-rust oil-dipped

SCO
Cable clip

Information

The SCO cable clip is a fastener which can be mounted manually on the outside edge of a panel at any point in an assembly line. SCO is both removable and reusable. Due to its flexibility, it can be used to fasten rods, cables, pipes, conduits etc in complete safety and with a wide range of different application diameters.
It has many general industrial applications but is particularly useful in automotive, electronics and white-goods applications.

SCO Cable clip

Article	Part nº SCO	e	a ±0,2	b	c	s	h +0,2	d min.	d max.	Box quantity	Outer box quantity
SCO-1101	02281040	0,7-1,1	14	21	15,4	0,5	6,3	4	6	1000	8000
SCO-1747	02281111	0,9-1,6	14	19,6	15,6	0,4	7,8	3	5	1000	8000
SCO-1748	02281015	0,9-1,6	14	19	15,5	0,4	7,8	4	7	1000	8000
SCO-1887	02281023	0,9-1,6	14	20	17	0,5	7,8	7	10	1000	8000
SCO-1888	02281031	0,9-1,6	14	26	18,8	0,5	7,8	10	13	1000	8000

Material specifications:
Spring Steel
HRc 43÷49 (HV 420-500)

Surface treatment:
Anti-rust oil-dipped

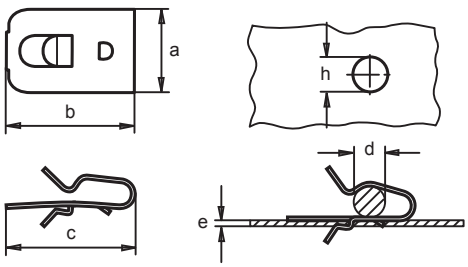

CLS
Safety clip

Information

The CLS Safety Clip is a fastener composed of two flaps in clip form which is mounted externally. One of the flaps is open at the bottom and is slightly curved in order to fit snugly into the groove of the shaft, while the second flap fits onto the shaft itself. This clip can only be fitted on shafts with a groove at the end of the shaft.
This clip is generally used in automotive applications.

CLS Safety clip

Article	Part nº CLS	a	b	c	s	$d1^{h11}$	$d2^{h11}$	m	n	Box quantity	Outer box quantity
CLS 5	02280320	9	10,8	5	0,35	5	4	0,74	2,5	10000	10000
CLS 6	02280514	11	12,8	6	0,35	6	5	0,74	3	10000	10000
CLS 8	02280573	14	16,5	8	0,4	8	6	0,94	3,5	1000	4000
CLS 10	02280311	18	22	10	0,5	10	8	1,05	4,5	5000	5000
CLS 12	02280194	22	25,3	14	0,5	12	9	1,15	5	4000	4000
(*) CLS 14	02280629	25	30,2	13,5	0,6	14	10	1,25	5,5	2500	2500

Material specifications:
Spring Steel
HRc45÷50 (HV 450-510)

Surface treatment:
(*) Geomet
Anti-rust oil-dipped

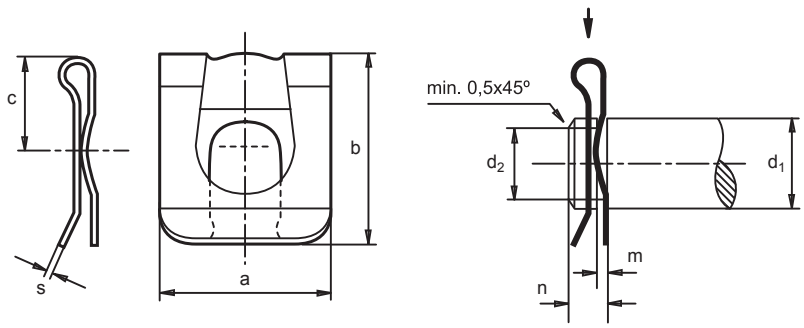

SRV
Spring steel panel latch

Information

The SRV Spring steel panel latch is a very useful fastener for use with movable panels and doors in combination with a door or panel stud. Form A is fastened to the panel using a threaded fastener or rivet while Forms B and C fit onto the panel and hold themselves in place due to their spring-mounting feature.

SRV Spring steel panel latch

Article	Part nº SRV	Panel Thickness e	Form	a	b	DIF ADM	c	d	DIF ADM	Resistance to opening kp	h	s	Mounting hole	Box quantity	Outer box quantity
SRV 1657	02260015	0,7-4	A	50,4	17,4	±0,2	15,8	4	±0,2	5	38	0,5	-	500	4000
SRV 1682	02260023	1,0-2,0	A	26	11	±0,2	7,5	3,3	±0,2	6,4	19,5	0,4	-	500	4000
SRV 2108	02260031	0,9-1,2	B	3,5	16	±0,2	18,15	-	±0,2	9,1	-	0,6	Fig. 12	500	4000
SRV 4434	02260082	0,9-1,2	C	17	6	±0,2	13,6	-	±0,2	-	-	0,4	Fig. 10 & 11	1000	8000

Mounting holes

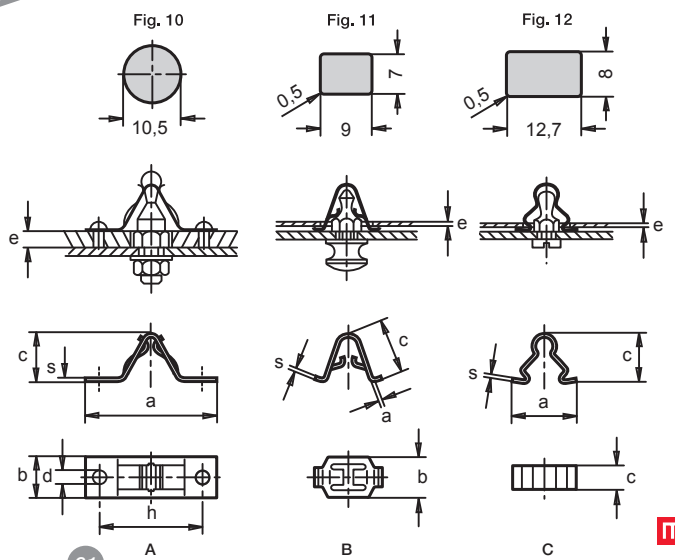

Material specifications:
Spring Steel
HRc 47÷51

Surface treatment:
Anti-rust oil-dipped

SCL
Tubular clip

Information

The SCL Tubular Clip is one of a sub-group of fasteners which are used in conjunction with rivets. They can be compared to self-locking nuts for blind assemblies and are used where other fasteners cannot be applied. There are two varieties of SCL:
Self-Locking: The tubular clip is inserted into the corresponding hole in the panel. A rivet is the then inserted which causes the clip to open, fixing it into the panel.
Removable: the top of the clip flares out exerting pressure on the rivet.

SCL Tubular clip

Article	Part nº SCL	Fig.	a	b	c	g	s	Box quantity	Outer box quantity
SCL 2645	02282018	B	6	7,1	-	1,8	0,4	1000	16000
SCL 1689	02282106	C	4,7	5,1	0,8	2,65	0,3	1000	32000
SCL 2231	02282114	C	6	6,3	1	3,6	0,4	1000	32000
SCL 1696	02282122	C	8,6	8,7	1	5,5	0,5	1000	16000
SCL 0813	02282050	A	7,35	11,3	-	4,19	0,3	1000	16000
SCL 0813-3	02282077	A	7,35	11,3	-	1,19	0,3	1000	16000

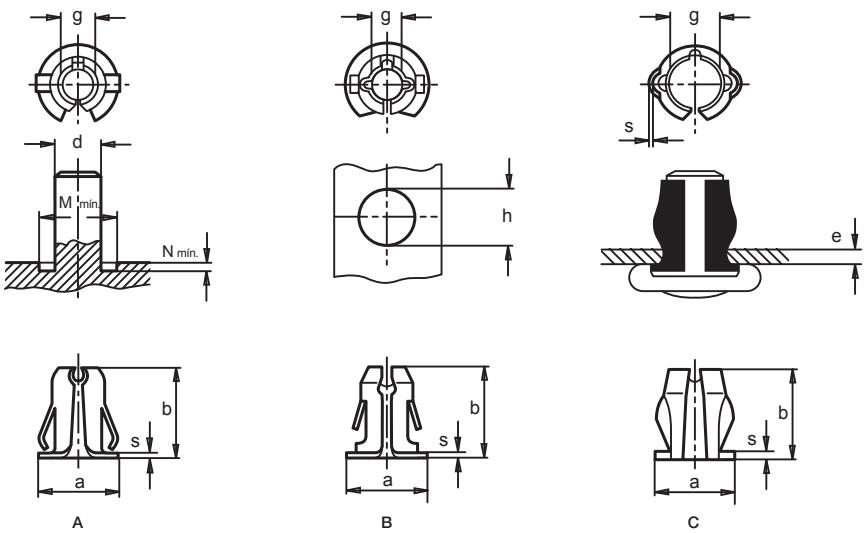

Material specifications:
Spring Steel
Quenched and tempered
HRc. 43÷49

Surface treatment:
Anti-rust oil-dipped

CLG cable clip

Information

The CLG cable clip was designed to attach cables or tubular conduits to panels or frames in general. It is composed of a base in clip form which can be fastened to the panel and an upper arm which opens out in the opposite direction to the clip base where a cable or conduit can be fitted

CLG cable clip

Article	Part nº CLG	Fig.	a	b	c	d	r	s	Box quantity	Outer box quantity
Clip CLG 0,8-A	02100907	A	0,8	3,3	6,5	10	3,5	0,4	10000	10000
Clip CLG 0,4-B	02100915	B	0,4	3,3	9,7	12	5,5	0,4	10000	10000
Clip CLG 0,5-B	02100210	B	0,5	2,7	7,5	10	3,5	0,4	5000	5000
Clip CLG 1,0-B	02100819	B	1,0	5,3	9,4	12	5,5	0,4	1000	4000

Material specifications:
Spring Steel
Quenched and tempered

Surface treatment:
Zinc-plated

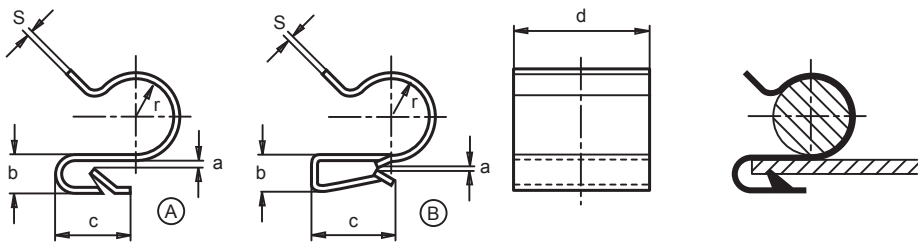

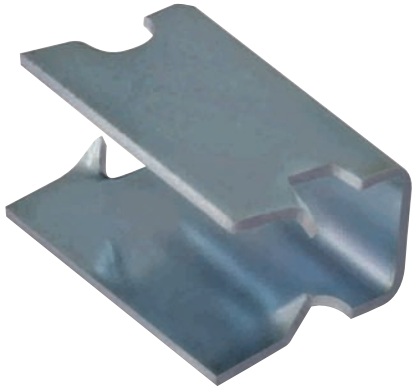

GRU
Edge clip

Information

The GRU Edge Clip is a fastener composed of two flaps in clip form which is mounted externally by applying pressure to both sides. Some models incorporate a spike on the inside of one of the flaps which helps to ensure a good grip. In automotive applications these clips are used to fasten upholstery, mats and similar parts.

GRU Edge clip

Article	Part nº GRU	Fig.	a	b	c	d	s	Box quantity	Outer box quantity
GRU210003	02100034	A	1,2	3,3	7	13	0,4	500	8000
GRU210075	02100755	A	4,1	6,7	13	20	0,35	1000	4000
GRU210046	02100464	A	0,4	3,3	7	13	0,4	1000	16000
GRU210064	02100640	A	1	3,3	8	13	0,4	1000	8000
GRU210044	02100448	A	2,8	6,3	8,6	12,8	0,5	1000	8000
GRU210045	02100456	A	5,5	9	10,5	12,8	0,5	10000	10000
GRU210043	02100430	A	2,8	5	6,5	12,8	0,5	15000	15000
GRU210017	02100173	A	1,2	3,3	7	13	0,4	10000	10000
GRU210023	02100237	A	1	1,5	8,5	13,5	0,5	15000	15000
GRU210002	02100026	B	0,9	3,3	8,7	13	0,4	500	8000
GRU210073	02100739	B	2,2	5	12	12	0,4	5000	5000
GRU210102	02101029	C	0,6	7	15	12	0,6	4000	4000
GRU210069	02100691	C	2	7	15	12	0,6	5000	5000

Material specifications:
Spring Steel
Quenched and tempered

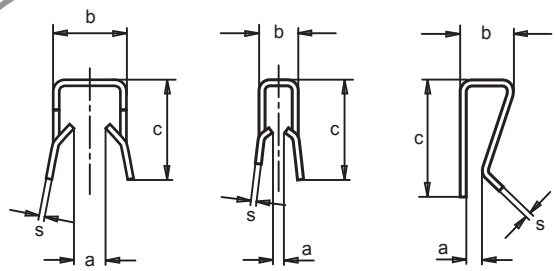

Fig. A Fig. B Fig. C

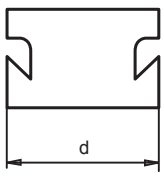

AFE
Special fastening washer

Information

This special fastening washer together with the rib that we will place in his central hole, is used to fix isolation panels of fiberglass. It is frequent used in ship's hulls.

AFE Special fastening washer

Article	Part nr. AFE	a	b	c	d	e	s	Box quantity	Outer box quantity
AFE 42	01802255	42	14,80	2,50	13,80	13,80	0,50	3500	3500

Material specifications:
DX 51D + ZI ZF

Surface treatment:
Galvanized

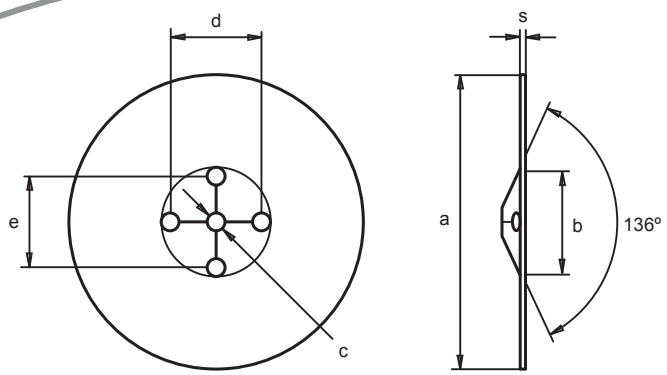

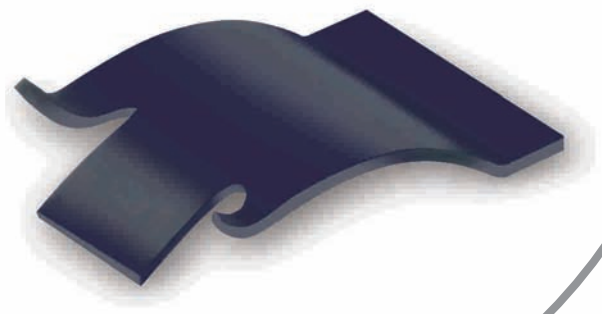

Button clip

Information

The button clip is used to fix plastic elements, moulding elements or command panels. They are quite used at the domestic appliances sector.

Button clip

Article	Clip Part nr.	A ±0,1	B ±0,2	C	Thickness	Box quantity	Outer box quantity
Clip Botón 1	02280960	7,5	8,5	1,1 ±0,1	0,4	50000	50000
Clip Botón 2	02280493	7,5	12,8	2,1 ±0,1	0,4	50000	50000
Clip Botón 3	02280952	7,5	12,8	2,6 ±0,4	0,5	50000	50000

Material specifications:
Steel CK67 s/DIN 17 222
Hardness HRC 43-48

Surface treatment:
Anti-rust oil-dipped

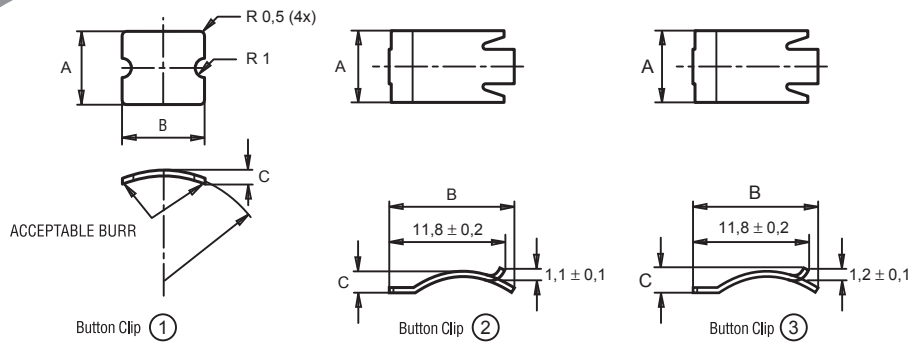

MIKALOR
Specials

MIKALOR

ASSORTMENT BOXES

ASSORTMENT BOXES

DIN 471-E Assortment box

Information

Mikalor designed the DIN 471-E assortment box to make sure that you have the circlip most suitable for your needs at your disposal. Different dimensions of circlips are distributed in individual compartments meaning that can find the circlip you require quickly and easily. The hard-wearing assortment box incorporates a handle to ensure easy and comfortable transport of your circlip kit.
All assortment boxes include a list of contents on the underside of the lid.

DIN 471-E Assortment box

Part nº Assortment 471-E	Nominal diameter	Quantity	Nominal diameter	Quantity	Nominal diameter	Quantity	Outer box quantity
03500038	5	200	16	100	28	20	5
	8	200	17	50	30	20	
	9	200	18	50	35	10	
	10	200	19	50	38	10	
	11	200	20	50	40	10	
	12	100	21	50	42	10	
	13	100	22	20	45	10	
	14	100	24	20			
	15	100	25	20			

Material specifications:
SPRING STEEL
< Ø 49 HRc47÷54 (HV 470-580)
> Ø 50 HRc44÷51 (HV 435-530)

Surface treatment:
Anti rust oil dipped.

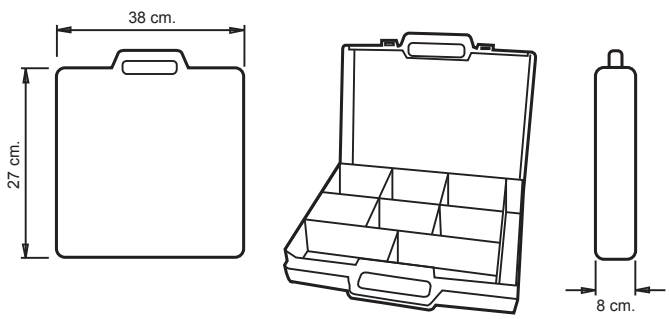

DIN 472-I Assortment box

Information

Mikalor designed the DIN 472-I assortment box to make sure that you have the circlip most suitable for your needs at your disposal. Different dimensions of circlips are distributed in individual compartments meaning that can find the circlip you require quickly and easily. The hard-wearing assortment box incorporates a handle to ensure easy and comfortable transport of your circlip kit.
All assortment boxes include a list of contents on the underside of the lid.

DIN 472-I Assortment box

Part nº Assortment 472-I	Nominal diameter	Quantity	Nominal diameter	Quantity	Nominal diameter	Quantity	Outer box quantity
03500046	8	200	19	100	35	20	5
	9	200	20	50	40	20	
	10	200	21	50	42	10	
	12	200	22	50	47	10	
	13	200	24	50	52	10	
	14	100	26	50	58	10	
	15	100	28	20	60	10	
	16	100	30	20			
	17	100	32	20			

Material specifications:
SPRING STEEL
< Ø 49 HRc47÷54 (HV 470-580)
> Ø 50 HRc44÷51 (HV 435-530)

Surface treatment:
Anti rust oil dipped.

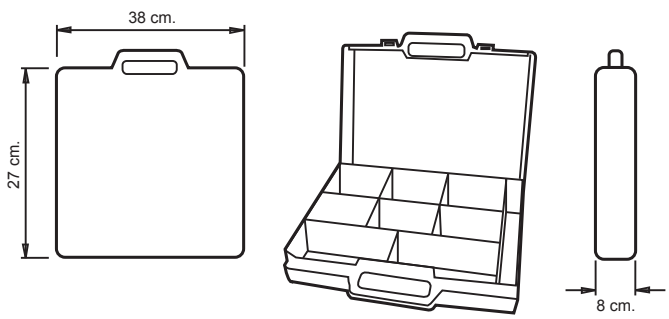

DIN 1481 heavy-duty spring pin assortment box

Information

Mikalor designed the DIN 1481 assortment box to make sure that you have the spring pin most suitable for your needs at your disposal. Different dimensions of spring pins are distributed in individual compartments meaning that can find the spring pin you require quickly and easily. The hard-wearing assortment box incorporates a handle to ensure easy and comfortable transport of your spring pin kit.
All assortment boxes include a list of contents on the underside of the lid.

DIN 1481 heavy-duty spring pin assortment box

Part nº Assortment	Nominal diameter	Quantity	Nominal diameter	Quantity	Outer box quantity
03501022	2 x 10	400	5 x 50	50	5
	2 x 24	400	6 x 12	50	
	3 x 8	200	6 x 24	50	
	3 x 12	200	6 x 40	50	
	3 x 20	200	8 x 20	20	
	3 x 50	100	8 x 36	20	
	4 x 12	100	8 x 60	20	
	4 x 20	100	10 x 24	20	
	4 x 26	100	10 x 40	20	
	4 x 40	100	10 x 60	20	
	5 x 10	50	12 x 30	10	
	5 x 20	50	12 x 70	10	
	5 x 30	50			

Material specifications:
SPRING STEEL
HV422÷560

Surface treatment:
Anti-rust oil-dipped

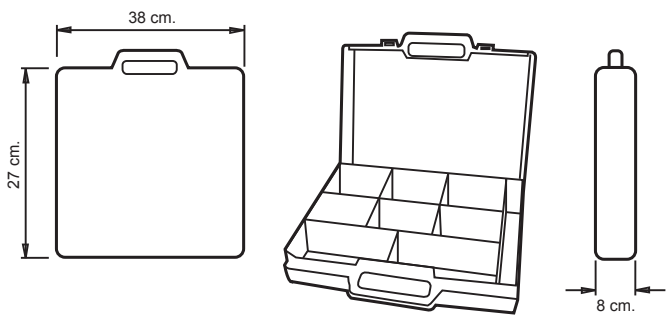

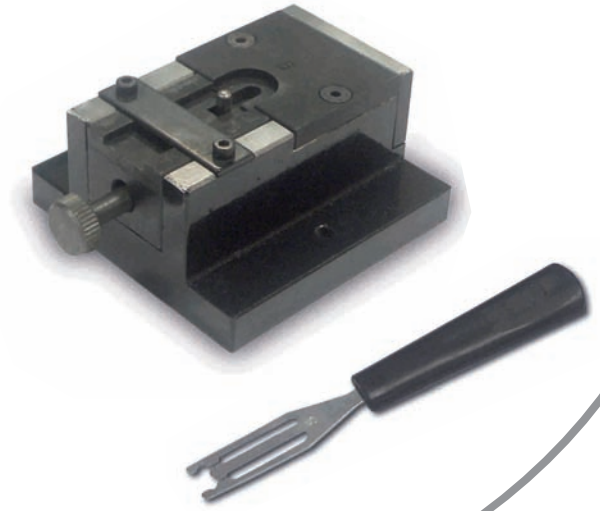

DIN 6799 Assembly tools

Information

Instructions:

1.- Remove the plastic cap from the cartridge

2.- Insert the narrow end of the cartridge into the slit in the application device, making sure that the spike goes down until it can go no further. Turn the knob on the front of the device clockwise until the cartridge is held firm in a vertical position

3.- Insert the fork (with the stamped number facing upwards) into the corresponding slot and push it in as far as it will go.

4.- Remove the fork. A DIN 6799 circlip is now held between the two prongs of the fork and is now ready to be slotted into the groove on the shaft.

DIN 6799 Assembly tools

Part nº Application device	Nominal diameter	Packing Quantity	Outer box quantity
03050267	1,5	1	1
03050274	1,9	1	1
03050288	2,3	1	1
03050299	3,2	1	1
03050300	4	1	1
03050317	5	1	1
03050322	6	1	1

DIN 6799 Assembly tools

Part nº Fork	Nominal diameter	Packing Quantity	Outer box quantity
03071022	1,5	1	1
03071033	1,9	1	1
03071044	2,3	1	1
03071054	3,2	1	1
03071066	4	1	1
03071072	5	1	1
03071088	6	1	1

*** For dimensions between M6 and M12, please consult for details on availability.**

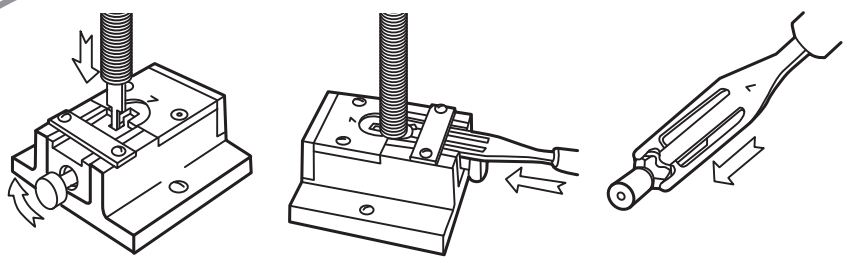

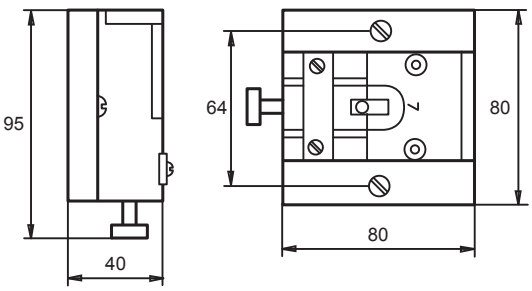

MIKALOR
Tools & Engineering

TOOLS & ENGINEERING

Mikalor Tools & Engineering, based in Sant Quirze del Vallès, was founded with the aim of specializing in the design and construction of progressive stamping dies with elements of plate bending and pressing for all the companies which belong to the Mikalor Group.
There are many companies in the market manufacturing progressive dies, but when quality is at stake, time is of the essence and technical backup is a must, you really have to look for a supplier you can trust. Mikalor Tools & Engineering guarantees total reliability and state of the art products.
We are geared towards maximum reliability in each of the processes we are involved in. Our highly skilled workforce has great experience in the manufacture of progressive dies and has the latest and most modern technology at their disposal.

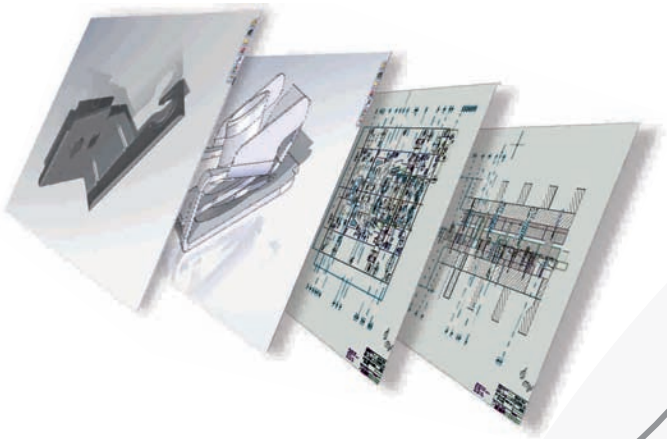

PROJECTS

All of our projects start with a request from one of our customers to create, improve or simplify the development of a fastener. Our technological capacity, channeled via the engineering department, allows us to propose the best design solution and suggest how to get the best out of a die or machine tool. In order to do this, we use state of the art 2 dimensional and 3 dimensional computer aided design programs.

PROTOTYPES

The fact that we can supply prototypes very quickly means that we can collaborate actively with the engineering departments of our customers, analyzing all the variables involved in assembly, and together decide on the most appropriate improvements to the fastener. This partnership also helps us to ensure that the fastener we design is totally functional and cost-effective.

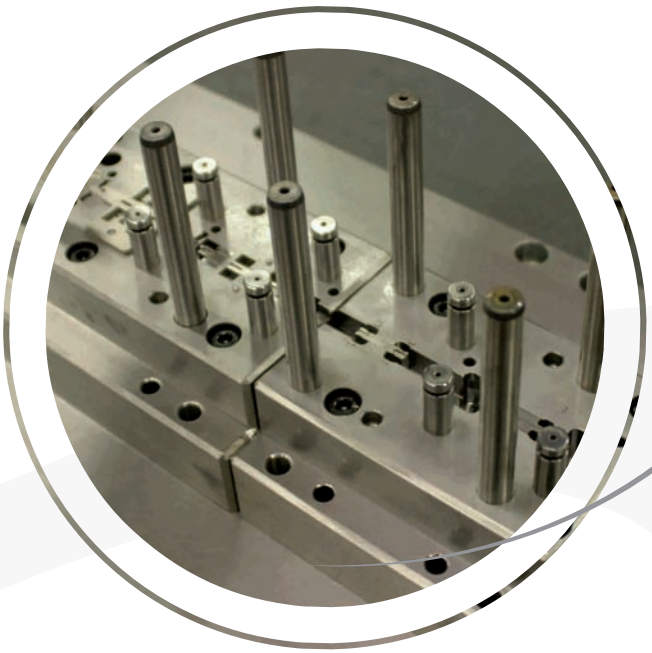

DIES

When manufacturing a progressive die it is of paramount importance to use the correct design for the die in question in order to get the most from the process. This is true whether it is a cutting die or a progressive die with elements of plate bending or pressing. The technology of the machine is also vital, as are the materials used.

Our knowledge, experience and technology allow us to manufacture progressive dies of up to 4 metres in length, with more than 18 different bending and pressing processes in only one drop and with tolerances of +/- 0,001mm

SPARE PARTS

Our spare parts department is responsible for supplying all the necessary spare parts to ensure that our dies are in perfect working order again in a maximum of 96 hours. We can do this thanks to the machinery we use and our years of experience in the manufacture of a wide variety of spare parts. This means that the spare parts we supply will not need minor adjustments and will be able to guarantee reliability in productivity.

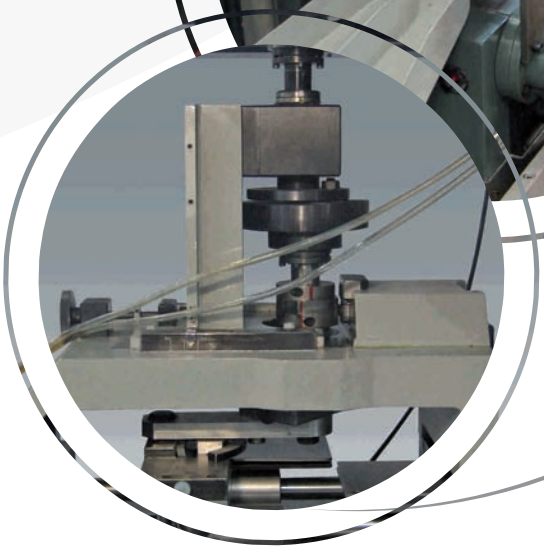

ACCESSORIES FOR PRESSES AND AUTOMATION

In order to help our customers to increase productivity in their mechanical manufacturing processes and in the assembly of the fasteners manufactured by Mikalor Fastening Solutions, our engineering department studies the process in order to supply the most convenient automation solution.

At the same time, we also have standard band conveyors for presses and machinery, with a maximum bandwidth of 300mm, thicknesses up to 2,5mm top speed of 300mmmm and with a precision of +/- 0,01mm

Much more than fasteners

Much more than fasteners

www.mikalor.com

TÜVRheinland UNE – EN ISO 9001:2000

TÜVRheinland UNE – EN ISO 14001:2004

damesa

Garraf, 10-12 - Pol. Ind. Pla de la Bruguera
08211 CASTELLAR DEL VALLÈS (Barcelona) Spain
Tel. 00 34 937 299 610 - Fax 00 34 937 142 425
damesa@damesa.es - www.damesa.es

D.L.: B-31217-2010